medicalbees

CE 0483

User's Manual

F-31-XXX-XX
F-40-XXX-XX

Battery-powered tools for large bone surgery

Orthopaedic Cordless Drill / Saw System

medical bees GmbH
Friedrich-Woehler-Strasse 13
78576 Emmingen-Liptingen
Germany

Table of Contents

Table of Contents **2**

1 Introduction and product description **6**
1.1 General information **6**
1.2 Intended use and indications **6**
1.2.1 Handpieces, Battery (Power Pack) and attachments 6
1.2.2 Cleaning and maintenance accessories 6
1.3 Contraindications **6**
1.3.1 Handpieces, Battery (Power Pack) and attachments 6
1.3.2 Cleaning and maintenance accessories 6
1.4 Application **7**
1.4.1 Application duration 7
1.4.2 Patient population 7
1.4.3 The user and the field of application 7
1.4.4 Service life 7
1.5 Safety and warning instructions **7**
1.5.1 ⚠ General safety instructions 7
1.5.2 ⚠ Cleaning and care of the bee-system 7
1.5.3 ⚠ Combination products and tools 8
1.5.4 ⚠ The User / Application 8
1.5.5 ⚠ Users and/or patients 8
1.5.6 ⚠ Operation and battery mode 8
1.6 Combination products and accessories **9**
1.6.1 Accessories to be used / Scope of delivery 9
1.6.2 Combinability of individual beesystem components 10
1.6.3 Recommended cutting tool 13
1.6.4 NON STERILE Storage and Transport 14
1.6.5 Disposal 14
1.6.6 Guarantee 14

2 Operation of the device **15**
2.1 Description of the controls, indication functions and symbols **15**
2.1.1 Drilling / reaming machine (F-31-100-00) 15

2.1.2 Drilling machine (F-31-150-00) 16
2.1.3 Oscillating saws Synthes AO connection (F-31-300-00; F-31-301-00) 17
2.1.4 Oscillating saw Stryker Sawblade connection (F-31-310-00/F-31-311-00) 18
2.1.5 Straight Oscillating saw Stryker Sawblade connection (F-40-100-00/F-40-101-00) 19
2.1.6 Straight Oscillating saw Synthes AO connection (F-40-110-00/F-40-111-00) 20
2.1.7 Sternum saw/ reciprocating saw with keyless chuck (F-31-601-00) 21
2.1.8 Oscillating reaming machine (F-31-700-00) 22
2.1.9 Power Pack (F-30-900-00) 23
2.1.10 Charging unit (e.g. F-30-900-50) 23
2.2 Start up 24
2.2.1 Power pack insertion 24
2.2.2 Power pack removal 25
2.3 Battery capacity 27
2.3.1 Available battery capacity 27
2.3.2 Power pack overheating 27
2.3.3 Energy saving function 27
2.4 Power pack, charging, transport and storage 28
2.5 LED light indications 28
2.5.1 Light indications during handpiece operation 28
2.5.2 The meaning of light indications 29
2.6 Charging units 30
2.6.1 Charger start up 30
2.6.2 Charger cleaning 30
2.6.3 Power pack charging 31
2.6.4 Charge new or longer unused power packs 31
2.6.5 Power pack storage 31
2.6.6 Charge control indicators on the charger and on the power pack 32
2.6.7 Indications on the power pack after removal from the charger 32
2.6.8 Charger disconnection from the mains 33
2.7 Application of drilling / reaming machines (F-31-100-00 and F-31-150-00) 33
2.7.1 Start up 33
2.7.2 The oscillating mode on and off 33
2.7.3 Mode switching between drilling and reaming (only with F-31-100-00) 33
2.7.4 Assembly / disassembly of the attachments/chucks for drilling / reaming machines (F-31-100-00 and F-31-150-00) 34
2.7.5 Attachment mounting 35
2.7.6 Mount cutting tools into the attachments / chucks and remove again 35
2.7.7 Attachment removal 36
2.7.8 Rotating attachments / chucks 36

2.8 Application of oscillating saws Synthes AO saw blade connection (F-31-300-00; F-31-301-00) 43
2.8.1 Start up of oscillating saws ... 43
2.8.2 Saw head positioning ... 43
2.8.3 Replacement of saw blades ... 43
2.8.4 Application of oscillating saws ... 45
2.8.5 Recommendations for handling of saw blades ... 45
2.9 Application oscillating saw Stryker saw blade connection (F-31-310-00, F-31-311-00) ... 45
2.9.1 Start-up of oscillating saw ... 46
2.9.2 Saw head positioning ... 46
2.9.3 Replacement of saw blades ... 46
2.9.4 Application of oscillating saws ... 48
2.9.5 Recommendations for handling of saw blades ... 48
2.10 Application of reciprocating saw (F-31-601-00) ... 48
2.10.1 Start up of reciprocating saw ... 49
2.10.2 Replacement of saw blades ... 49
2.10.3 Works with saw blades ... 50
2.10.4 Recommendations for handling of saw blades ... 50
2.11 Application of sternum saws (F-31-601-00) ... 51
2.11.1 Start-up of sternum saw ... 51
2.11.2 Replacement of saw blades ... 51
2.11.3 Works with sternum saws ... 51
2.11.4 Recommendations for handling of saw blades ... 52
2.11.5 Keyless version (F-31-601-00) ... 52
2.12 Application of oscillating reaming machine (F-31-700-00) ... 54
2.12.1 Start up ... 54
2.12.2 Mounting/dismounting of a tool ... 54
2.12.3 Cutting tool mounting ... 55
2.12.4 Cutting tool dismounting ... 56

3 Care and maintenance (after validated cleaning and sterilisation procedures) ... 57
3.1 General information ... 57
3.1.1 Extraordinary transmissible pathogens ... 57
3.2 Preparation to cleaning ... 58
3.2.1 Dismantling ... 58
3.3 Manual cleaning ... 59
3.3.1 Machine / handpiece ... 59
3.3.2 Attachments ... 60
3.4 Mechanical cleaning after manual pre-cleaning ... 61
3.4.1 Manual pre-cleaning of the machine/handpiece ... 61

3.4.2 Manual pre-cleaning of the attachments / chucks 62
3.4.3 Mechanical cleaning 63
3.5 Oiling / maintenance 65
3.6 Packaging 65
3.7 Sterilisation 65
3.8 Repairs and Technical Service 66

4 Troubleshooting 67
4.1 Device/handpiece and lid 67
4.2 Power pack 69
4.3 Attachments/chucks and tools 71
4.4 Charging unit 72

5 Technical data 73
5.1 Operating cycle 73
5.2 Device specification 74
5.3 Environmental conditions 78
5.4 Applicable standards 78
5.5 Electromagnetic compliance 79

6 REF Order information 83
6.1 Handpieces 83
6.2 Power Pack (battery, motor, electric) 83
6.3 Attachments 84
6.4 Cleaning and care of the bee-system 84

7 Used symbols 85

8 Address / Report 88

1 Introduction and product description

1.1 General information

Before any product use, read carefully this User's Manual, while keeping it easily available for the Operator or for appropriate service personnel.

Read carefully all the symbol-marked caution and warning texts. Incorrect use of the products may lead to serious injuries of the patient, the user or other persons.

This is a User's Manual for individual machines, including accessories. These machines can be used either as one system or as separate units.

1.2 Intended use and indications

1.2.1 Handpieces, Battery (Power Pack) and attachments

The basic features of the beesystem serve the purpose of the medullary cavity expansion (medullary canal; *Cavitas medullaris*) in preparation for implant setting by drilling, reaming, bolting, sawing and severing of bones (or bone material). The system may be used both for resection of distal femur and tibial condyles and for iliac bone preparation.

The system consists of battery-operated drive units with a range of attachments and accessories for drilling, reaming and bolting operations, for mounting of pins and wires, as well as for cutting of bones or hard tissues in general traumatic and endoprosthetic surgery.

Sternum saws, being part of the system, are intended for thorax surgery procedures and used for sternum separation.

1.2.2 Cleaning and maintenance accessories

The cleaning and maintenance accessories are used for cleaning and processing of the beesystem during transport and storage, culminating during surgical applications. The maintenance kit is also used for storage and repairs of appropriate components.

A sterile funnel is a special component, intended to protect any direct contact between the non-sterile power pack and the sterile handpiece body, after the latter is set up and sterilised for surgical use.

1.3 Contraindications

1.3.1 Handpieces, Battery (Power Pack) and attachments

No contraindication has been identified, which would speak against the use of the drive units and the accessories.

With regards to cutting, drilling and reaming tools to be used in patients with the Creutzfeldt-Jakob disease (CJD), who - because of associated infection hazards - are regarded to be risk patients - the procedures shall always be undertaken with the use of disposable instruments.
Any applications of the system, other than those, specified above, are neither intended by design nor tested and shall thus be forbidden.

1.3.2 Cleaning and maintenance accessories

The cleaning kit shall exclusively be used for the purpose for which it has been intended in the medical fields and operated by educated and qualified personnel. The attending physician or an appropriate medical staff member shall be responsible for cleaning kit selection with accessories for defined applications, as well as for adequate training and correct management.

1.4 Application

1.4.1 Application duration

The products are intended for short application periods (< 60 min.)

1.4.2 Patient population

Apart from the contraindicated applications, specified both before and in this User's Manual. there are no limitations with regards to patient population.

1.4.3 The user and the field of application

The bee-system (including the cleaning and maintenance accessories) shall be used exclusively by properly educated and qualified personnel. The products are intended exclusively for the medical field and shall, therefore, be used at suitable theatre environment. It is an essential requirement that the user, as well as the appropriate medical staff, get familiar with the instruments before their practical handling.

1.4.4 Service life

The medical bees GmbH Company provides one-year inspection and maintenance by authorised service stations (e.g., the Medical bees GmbH). The medical bees GmbH shall assume no responsibility for any defects / failures, arising either from improper handling of the devices or from their unauthorised maintenance. Assuming proper handling and authorised maintenance of the device, its service life shall be, at least, 3 years (except wear & tear parts).

Since the products are subject to normal wear, they shall regularly be inspected or maintained, Appropriate recommendations are specified in particular parts of the User's Manual.

The date of manufacturing can be retrieved from the Manfacturing date number.

1.5 Safety and warning instructions

General safety and warning instructions are listed below. They will individually be added and specified in particular parts of the present User's Manual.

1.5.1 ⚠ General safety instructions

- It is recommended to have a spare system ready at all times for immediate use, since technical problems can never be entirely excluded. The same recommendation applies to lengthy and long lasting procedures.
- Components with visible defects (for example, after being dropped) shall not be used.
- The system shall not be used in the presence of oxygen, nitrous oxide or of flammable mixtures of volatile anaesthetic gases and the air.
- With regard to electromagnetic compatibility (EMV), it is imperative to learn the contents of the appropriate chapter of this User's Manual.

1.5.2 ⚠ Cleaning and care of the bee-system

- Both before the first and all subsequent applications, the driving units, the attachments and the accessories shall undergo a complete reprocessing procedure.
- Protective covers and films shall fully be removed before sterilisation.
- In order to assure proper performance of the system, the medical bees Company recommends its cleaning and care after every use to be performed according to the instructions provided in the chapter "Care and Maintenance" of this User's Manual.

- Moving parts shall be maintained for their smooth operation with a special lubrication oil; recommended by the bee-system GmbH is a spray oil agent (F-30-900-60) or a paraffin oil, suitable for sterilisation.
- In order to guarantee proper performance of the system, the medical bees GmbH Company recommends an annual maintenance and inspection to be carried out by one of their medical customer service stations.
- The Power Pack shall by no means be processed (by manual or automatic cleaning) or sterilised
- It is imperative that the sterile funnel is sterilised after each use in order to guarantee the system sterility, when a non-sterile Power Pack is inserted into a sterile handpiece.

1.5.3 ⚠ Combination products and tools

- New cutting tools shall be used for each surgical procedure.
- For protection against heat necrosis of tissues, cutting tools shall always be flushed with a coolant.
- In order to guarantee proper performance of the system, only original cutting tools shall be used, obtained either from the medical bees GmbH or from another vendor, recommended by the medical bees GmbH (the same shall apply to the battery-loading equipment)

1.5.4 ⚠ The User / Application

- The User shall be responsible for proper intraoperative handling and use of the products.
- If the system is used in connection with some implant system, then its use shall be subordinate to the surgical technique of the procedure
- The Manufacturer shall assume no responsibility for damages, which may arise from improper operation of the system or from its maintenance provided by unauthorised service stations
- The machines get heated under continuous load. In order to avoid exceeding of permissible surface temperature of the device, appropriate cooling phases shall be implemented. A description of the issue is provided in the Instructions for Use.

1.5.5 ⚠ Users and/or patients

- Note to the user and/or patient: All serious incidents relating to the device must be notified to the manufacturer and the competent authority of the Member State in which the user and/or patient is established.

1.5.6 ⚠ Operation and battery mode

- In order to avoid injuries, the locking mechanism of the device shall be activated before the device is put aside, i.e., the selection switch shall be set at the LOCK position (the symbol of locked padlock). In addition, the bee-system device shall be handled in its lateral position in order to avoid possible tipping and falling down.
- The device shall be put in operation only with its fully charged power pack. It must be ensured that the power pack has been charged in good time. It is recommended that the power pack is returned to the charging unit immediately after a given procedure is completed.

In order to guarantee sterility, the power pack can be replaced during surgical procedure only according to the instructions provided in the User's Manual.

1.6 Combination products and accessories

1.6.1 Accessories to be used / Scope of delivery

The system comprises multiple handpieces (drilling machine, reaming machine, sagittal saw, sternum saw, 2° and 4° oscillating saw, oscillating reaming machine). One or more power packs (battery, motor and electronic), as well as various attachments which belong to the system.

The power packs shall be charged with an appropriate charger of the medical bees (F-30-900-50 / F30-900-51 / F-30-900-52)

In order to ensure trouble-free performance of the system, the manufacturers of cutting tools, recommended by the Medical bees, shall be used. Otherwise, the Medical bees GmbH shall assume no guarantee for flawless performance of the system.

For cleaning and care of the system, special means are recommended, such as cleaning brushes and oil spray (F-30-900-60) or oil, as well as suitable for sterilisation medical paraffin oils (F-30-900-61).

The medical bees GmbH recommends the use of a tray, specifically designed for the system (e.g. F-31-910-13) to sterilize and store the system. Otherwise, the medical bees GmbH shall assume no guarantee for flawless performance of the system.

The following components shall (at least) be absolutely necessary for the system operation:

Handpiece (e.g. F-31-100-00)
Power pack (F-30-900-00)
Sterile funnel (F-30-900-20)
Charging unit (e.g. F-30-900-50)
At least one attachment, belonging to the system

REF An overview of the system components can be found at the end of this User's Manual

1.6.2 Combinability of individual beesystem components

System overview																	
		Drilling and reaming machine		Drilling machine		4° oscillating saw, Synthes		2° oscillating saw, Synthes		Oscilla-ting saw Stryker 2°/4°	Straight saw Syker 2°/4°	Straight saw Synthes 2°/4°	Reciprocating saw	Sternum saw	Sternum saw with keyless chuck		Oscillating reaming machine
Item No. Accessories	Name	**F-30-100-00**	**F-31-100-00**	**F-30-150-00**	**F-31-150-00**	**F-30-300-00**	**F-31-300-00**	**F-30-301-00**	**F-31-301-00**	**F-31-310-00 F-31-311-00**	**F-40-100-00 F-40-101-00**	**F-40-110-00 F-40-111-00**	**F-30-400-00**	**F-30-600-00**	**F-30-601-00**	**F-31-601-00**	**F-31-700-00**
F-30-900-00	Power Pack	x	x	x	x	x	x	x	x	x	x	x	x	x	x	x	x
F-30-900-50	Charging unit (1 charging slot)	x	x	x	x	x	x	x	x	x	x	x	x	x	x	x	x
F-30-900-51	Charging unit (2 charging slots)	x	x	x	x	x	x	x	x	x	x	x	x	x	x	x	x
F-30-900-52	Charging unit (4 charging slots)	x	x	x	x	x	x	x	x	x	x	x	x	x	x	x	x
F-30-900-53	Country-specific plug	x	x	x	x	x	x	x	x	x	x	x	x	x	x	x	x
F-30-900-54	Country-specific plug	x	x	x	x	x	x	x	x	x	x	x	x	x	x	x	x
F-30-900-55	Country-specific plug	x	x	x	x	x	x	x	x	x	x	x	x	x	x	x	x
F-30-900-56	Country-specific plug	x	x	x	x	x	x	x	x	x	x	x	x	x	x	x	x
F-30-900-57	POAG cable for charging units	x	x	x	x	x	x	x	x	x	x	x	x	x	x	x	x

System overview																		
		Drilling and reaming machine		Drilling machine		4° oscillating saw, Synthes		2° oscillating saw, Synthes		Oscilla-ting saw Stryker 2°/4°	Straight saw Styker 2°/4°	Straight saw Synthes 2°/4°	Reciprocating saw	Sternum saw	Sternum saw with keyless chuck		Oscillating reaming machine
Item No. Accessories	Name	**F-30-100-00**	**F-31-100-00**	**F-30-150-00**	**F-31-150-00**	**F-30-300-00**	**F-31-300-00**	**F-30-301-00**	**F-31-301-00**	**F-31-310-00 F-31-311-00**	**F-40-100-00 F-40-101-00**	**F-40-110-00 F-40-111-00**	**F-30-400-00**	**F-30-600-00**	**F-30-601-00**	**F-31-601-00**	**F-31-700-00**
F-30-100-10	Kirschner wire chuck (for drill/ream)	x	x														
F-30-100-15	Kirschner wire chuck (for standard)			x	x												
F-30-100-19	Extension for Kirschner wire chuck	x	x	x	x												
F-30-100-25	Adapter for radiolucent	x	x	x	x												
F-30-100-50	AO chuck, small	x	x	x	x												
F-30-100-51	AO chuck, big	x	x	x	x												
F-30-100-52	1/4 " attachment	x	x	x	x												
F-30-100-53	Hudson chuck	x	x	x	x												
F-30-100-54	Harris chuck	x	x	x	x												
F-30-100-55	Hexagonal chuck, SW6	x	x	x	x												
F-30-100-56	DIN-clutch for tools	x	x	x	x												
F-30-100-57	Zimmer Hall Chuck	x	x	x	x												
F-30-100-60	Jacobs drill chuck, small	x	x	x	x												
F-30-100-61	Jacobs drill chuck, big	x	x	x	x												
F-30-100-62	Rohm drill chuck	x	x	x	x												
F-30-100-63	Quick-action chuck with lock	x	x	x	x												
F-30-100-64	Quick-action chuck without lock	x	x	x	x												
F-30-100-65	Albrecht quick action chuck	x	x	x	x												
F-30-100-66	Large drill chuck	x	x	x	x												
F-30-400-05	Keyless top for sternum															x	
F-30-400-10	XL Keyless top for sternum															x	

System overview																	
		Drilling and reaming machine		Drilling machine		4° oscillating saw, Synthes		2° oscillating saw, Synthes		Oscilla-ting saw Stryker 2°/4°	Straight saw Styker 2°/4°	Straight saw Synthes 2°/4°	Reciprocating saw	Sternum saw	Sternum saw with keyless chuck		Oscillating reaming machine
Item No. Accessories	Name	**F-30-100-00**	**F-31-100-00**	**F-30-150-00**	**F-31-150-00**	**F-30-300-00**	**F-31-300-00**	**F-30-301-00**	**F-31-301-00**	**F-31-310-00 F-31-311-00**	**F-40-100-00 F-40-101-00**	**F-40-110-00 F-40-111-00**	**F-30-400-00**	**F-30-600-00**	**F-30-601-00**	**F-31-601-00**	**F-31-700-00**
F-30-900-10	Lubrication stand	x	x	x	x	x	x	x	x	x	x	x	x	x	x	x	x
F-30-900-20	Sterile funnel	x	x	x	x	x	x	x	x	x	x	x	x	x	x	x	x
F-30-900-60	Spray oil of the Beesystem GmbH	x	x	x	x	x	x	x	x	x	x	x	x	x	X	x	x
F-30-900-61	Oil Pen	x	x	x	x	x	x	x	x	x	x	x	x	x	X	x	x
F-30-900-70	Universal spray adapter (for all machines)	x		x		x		x					x	x	x		
F-30-900-72	Spray adapter for drilling machine (for F-30-100-00 / F-30-150-00)	x		x													
F-30-900-74	Spray adapter for saws (for F-30-400-00 / F-30-600-00 / F-30-601-00)												x	x	x		
F-30-900-78	Spray adapter for drilling machine (for F-30-100-00 / F-30-150-00)	x		x													
F-30-910-05	Lid for cleaning and sterilisation tray with a lock	x	x	x	x	x	x	x	x	x	x	x	x	x	x	x	x
F-31-910-13	Cleaning and sterilisation tray (1 machine) with lid, bare grip – for beesystemI and beesystemII	x	x	x	x	x	x	x	x	x	x	x	x	x	x	x	x
F-31-910-18	Cleaning and sterilisation tray (2 machines) with lid, bare grip - for beesystemI and beesystemII	x	x	x	x	x	x	x	x	x	x	x	x	x	x	x	x
F-30-910-30	Universal rinsing adapter (for all machines)	x	x	x	x	x		x					x	x	x		
F-30-910-31	Rinsing adapter for drilling machine	x	x	x	x												
F-30-910-33	Rinsing adapter for reciprocating- sternum saw (for F-30-400-00 / F-30-600-00 / F-30-601-00)												x	x	x		
F-30-910-40	Rinsing set	x	x	x	x	X	x	x	x	x	x	x	x	x	x	x	x
F-30-910-42	beesystem chuck: Miele / Stielco / Webeco	x	x	x	x	x	x	x	x	x	x	x	x	x	x	x	x
F-30-910-43	beesystem adapter Belomed	x	x	x	x	x	x	x	x	x	x	x	x	x	x	x	x
F-30-910-44	beesystem adapter Maquet / MediKomp / Getinger	x	x	x	x	x	x	x	x	x	x	x	x	x	x	x	x
F-30-910-50	Cleaning brushes - set	x	x	x	x	x		x					x	x	x	x	x

1.6.3 Recommended cutting tool

Third-party products (Recommendations of the Medica-Bees GmbH Company; not included in the list of products)	Drilling and reaming machine		Drilling machine		4° oscillating saw, Synthes		2° oscillating saw, Synthes		Oscilla-ting saw Stryker 2°/4°	Straight saw Styker 2°/4°	Straight saw Synthes 2°/4°	Reciprocating saw	Sternum saw	Sternum saw with keyless chuck		Oscillating reaming machine
	F-30-100-00	F-31-100-00	F-30-150-00	F-31-150-00	F-30-300-00	F-31-300-00	F-30-301-00	F-31-301-00	F-31-310-00 F-31-311-00	F-40-100-00 F-40-101-00	F-40-110-00 F-40-111-00	F-30-400-00	F-30-600-00	F-30-601-00	F-31-601-00	F-31-700-00
3-flute spiral drill bit (Synthes Company)	x	x	x	x												
Saw blades with Synthes joint					x	x	x	x			x					
Saw blades with Stryker joint									x	x		x	x	x	x	
Saw blades of the Gomina AG Company					x	x	x	x	x	x	x					
Saw blades of the Risa GmbH Company					x	x	x	x	x	x	x	x	x	x	x	
Saw blades of the company mahe medical GmbH					x	x	x	x	x	x	x					
Hol reamers of the Richard Wolf GmbH Company																x

Saw blades of the following manufacturers are recommended with their dimensions and connections.

	Gomina AG Company	mahe medical GmbH	Risa GmbH Company
Synthes connection **Oscillating saw**	70 mm long, 25 mm wide, 0.90 – 1.47 mm thick 70 mm long, 19 mm wide, 0.90 – 1.47 mm thick 90 mm long, 25 mm wide, 0.90 – 1.47 mm thick 90 mm long, 19 mm wide, 0.90 – 1.47 mm thick 90 mm long, 12 mm wide, 0.90 – 1.47 mm thick 90 mm long, 12-19mm wide, 0.90 – 1.47 mm thick	Crossed teeth 48-95mm long, 22-50mm wide, 0.4-1.2 mm thick 18-68mm long, 4.0-15 mm wide, 0.4-0.6 mm thick Diamond-ground teeth 90-120 mm long, 25-31 mm wide, 0.89 mm-1.47 mm thick 50-110 mm long, 25 mm wide, 0.89mm-1.47 mm thick 90-120 mm long, 19-22 mm wide, 0.89 mm-1.47 mm thick 50-100 mm long, 13-19 mm wide, 0.89 mm-1.47 mm thick	Crossed teeth 48-95mm long, 22-50mm wide, 0.4-1.2 mm thick 18-68mm long, 4.0-15 mm wide, 0.4-0.6 mm thick Diamond-ground teeth 90-120 mm long, 25-31 mm wide, 0.89 mm-1.47 mm thick 50-110 mm long, 25 mm wide, 0.89mm-1.47 mm thick 90-120 mm long, 19-22 mm wide, 0.89 mm-1.47 mm thick 50-100 mm long, 13-19 mm wide, 0.89 mm-1.47 mm thick
Stryker 6 connection oscillating saw	70 mm long, 25 mm wide, 0.90 – 1.47 mm thick 70 mm long, 19 mm wide, 0.90 – 1.47 mm thick 90 mm long, 25 mm wide, 0.90 – 1.47 mm thick 90 mm long, 19 mm wide, 0.90 – 1.47 mm thick 90 mm long, 12 mm wide, 0.90 – 1.47 mm thick 90 mm long, 12-19mm wide, 0.90 – 1.47 mm thick	Crossed teeth 48-95mm long, 22-50mm wide, 0.4-1.2 mm thick 18-68mm long, 4.0-15 mm wide, 0.4-0.6 mm thick Diamond-ground teeth 90-120 mm long, 25-31 mm wide, 0.89 mm-1.47 mm thick 50-110 mm long, 25 mm wide, 0.89mm-1.47 mm thick 90-120 mm long, 19-22 mm wide, 0.89 mm-1.47 mm thick 50-100 mm long, 13-19 mm wide, 0.89 mm-1.47 mm thick	Crossed teeth 48-95mm long, 22-50mm wide, 0.4-1.2 mm thick 18-68mm long, 4.0-15 mm wide, 0.4-0.6 mm thick Diamond-ground teeth 90-120 mm long, 25-31 mm wide, 0.89 mm-1.47 mm thick 50-110 mm long, 25 mm wide, 0.89mm-1.47 mm thick 90-120 mm long, 19-22 mm wide, 0.89 mm-1.47 mm thick 50-100 mm long, 13-19 mm wide, 0.89 mm-1.47 mm thick
Stryker connection	n.a.	60mm long, 10mm wide, 0,6mm thick 80mm long, 10mm wide, 1,00mm hick	60 mm long, 10 mm wide, 0.6 – 1.47 mm thick 80 mm long, 10 mm wide, 1.00 – 1.47 mm thick

1.6.4 Storage and Transport

All the products, traded by us on the market, are delivered as non-sterile and shall thus demand processing before use. The medical bees GmbH Company recommends single use of corresponding drilling and cutting tool.

On product safety grounds, only original packaging systems shall be used for shipment and transport. If this is no longer available, please contact the Medical bees GmbH Company.

The environmental conditions for storage and transport are addressed in this User's Manual. Before disposal or return transport to the medical bees GmbH Company, the devices/handpieces, as well as the chucks, shall undergo the complete procedure of clinical processing for protection against infections. In addition, the products shall appropriately be marked as either „*hygienically safe*" or "*not decontaminated*".

1.6.5 Disposal

Defective devices can mostly be repaired, see the User's Manual for this issue. The devices contain lithium-ion batteries (Li-ion = chem. Symbol of harmful substance) and, on grounds relating to the protection of the environment, shall thus be properly disposed. Battery disposal shall comply with national laws or with the European battery directive: 2006/66/EC, as well as with the Waste of Electrical and Electronic Equipment (WEEE) directive - 2002/96/EC.

A special care shall be taken here with regards to fire, explosion and burn hazards. It must be kept in mind that battery cells shall not be damaged, opened, torn, shorted, crushed or allowed in contact with fluids.

Before disposal, the devices/handpieces, as well as the chucks, shall undergo the complete procedure of clinical processing for protection against infections. The device shall not be disposed of with the household waste.

1.6.6 Guarantee

The guarantee for the devices and accessories shall be cancelled in case of their unintended use and/or inappropriate operation, storage or transport. The Manufacturer shall assume no responsibility for damages, which may arise from improper operation of the system or from its maintenance provided by unauthorised service stations

2 Operation of the device

2.1 Description of the controls, indication functions and symbols

2.1.1 Drilling / reaming machine (F-31-100-00)

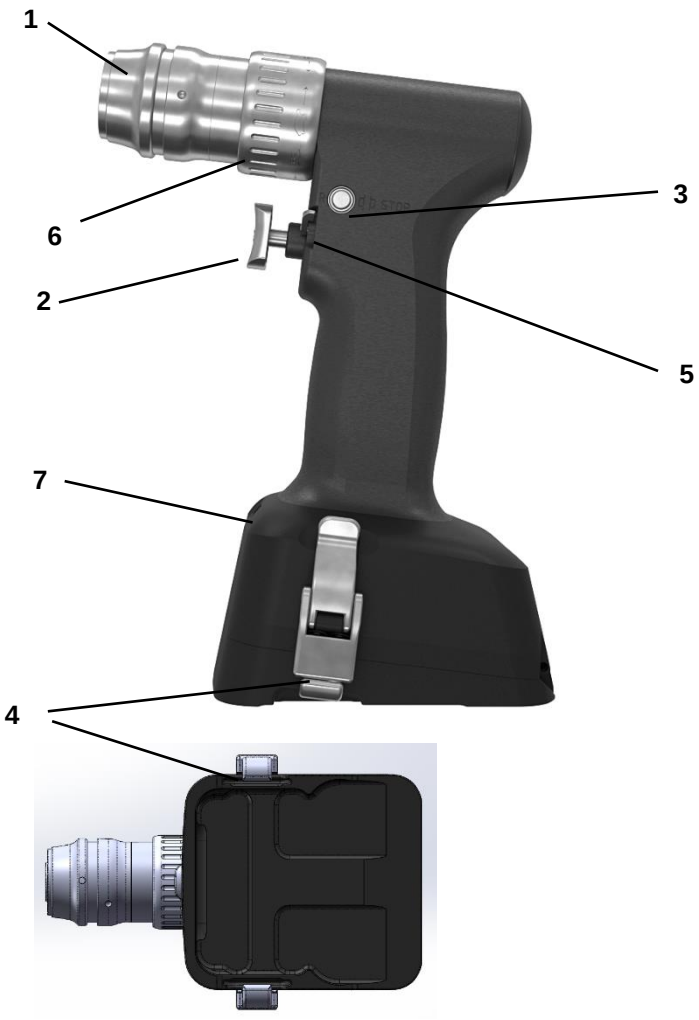

	The slider in the middle position → INTERLOCK / SAFETY POSITION The device cannot be unintentionally started
	The slide retracted → CW rotation
	The slide extended → CCW rotation
	The oscillating mode is on
	The oscillating mode is off

1 Release sleeve for attachments
2 Trigger for speed regulation
3 Slider for switching in the right direction, locking (safety position), left-hand rotation
4 Locking latches
5 Switch lever to switch oscillating mode ON or OFF
6 Rotating ring for the DRILL mode or REAM mode
7 Sight glass for LED indications and lighting

2.1.2 Drilling machine (F-31-150-00)

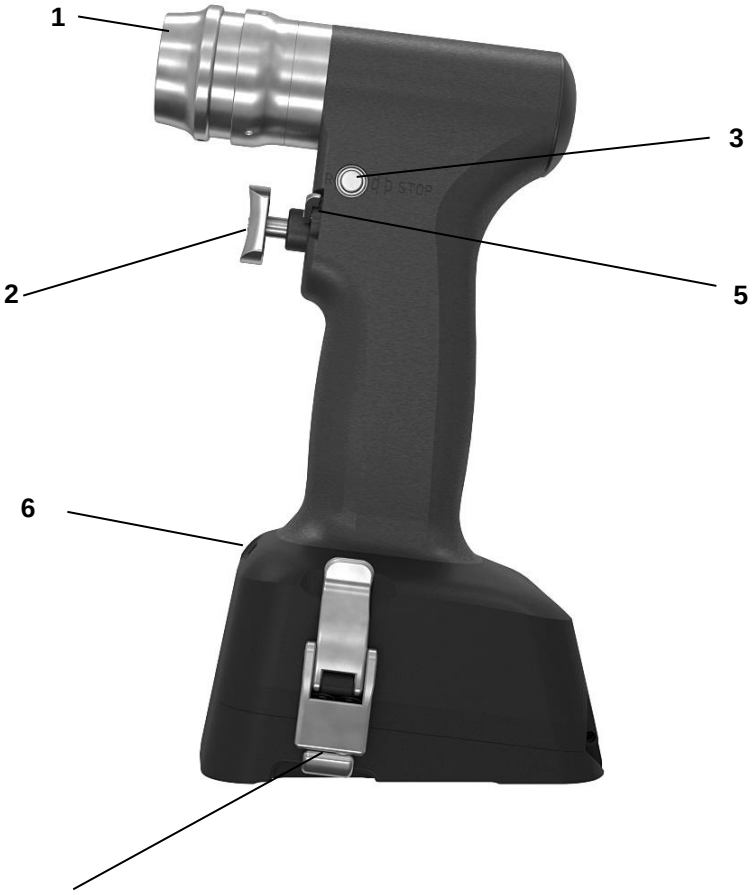

	The slider in the middle position → INTERLOCK / SAFETY POSITION The device cannot be unintentionally started
	The slide retracted → CW rotation
	The slide extended → CCW rotation
	The oscillating mode is on
	The oscillating mode is off

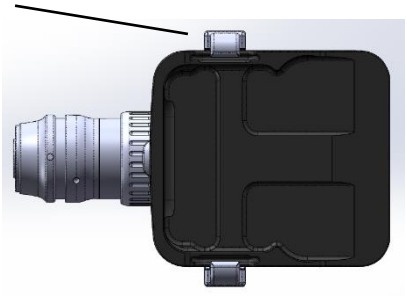

1 Release sleeve for attachments
2 Trigger for speed regulation
3 Slider for switching in the right direction, locking (safety position), left-hand rotation
4 Locking latches
5 Switch lever to switch oscillating mode ON or OFF
6 Sight glass for LED indications and lighting

2.1.3 Oscillating saws Synthes AO connection (F-31-300-00; F-31-301-00)

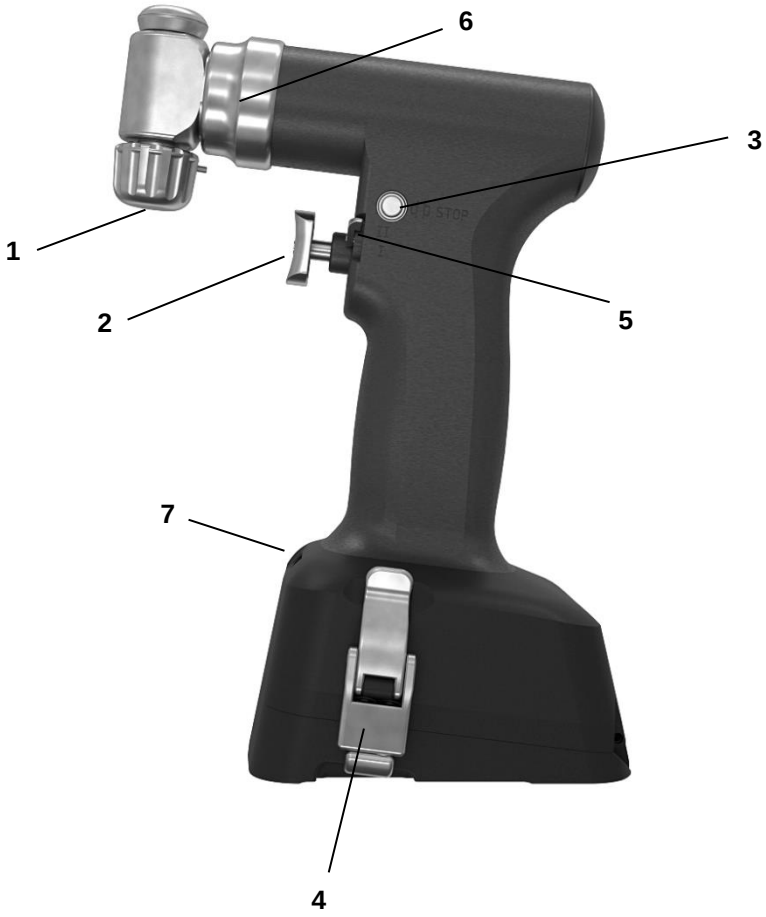

STOP	The slider in the middle position → INTERLOCK / SAFETY POSITION The device cannot be unintentionally started
I	Frequency/CPM set at step "I"
II	Frequency/CPM set at step "II"

1 Locking ring for saw blade tension
2 Trigger for speed regulation / oscillation frequency
3 Slider for switching ON, locking (safety position), ON
4 Locking latches
5 Switch lever to switch the I "Normal" and II "Quick" mode
6 Unlocking sleeve for setting the saw head in 45° steps
7 Sight glass for LED indications and lighting

2.1.4 Oscillating saw Stryker Sawblade connection (F-31-310-00/F-31-311-00)

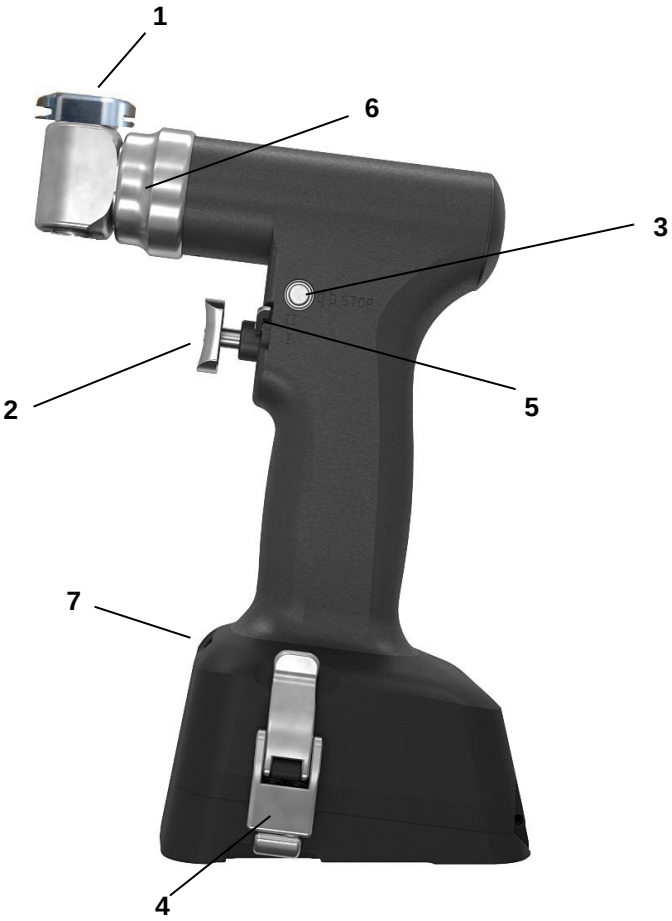

STOP	The slider in the middle position → INTERLOCK / SAFETY POSITION The device cannot be unintentionally started
I	Frequency/CPM set at step "I"
II	Frequency/CPM set at step "II"

1 Locking ring for saw blade tension
2 Trigger for speed regulation / oscillation frequency
3 Slider for switching ON, locking (safety position), ON
4 Locking latches
5 Switch lever to switch the I "Normal" and II "Quick" mode
6 Unlocking sleeve for setting the saw head in 45° steps
7 Sight glass for LED indications and lighting

2.1.5 Straight Oscillating saw Stryker Sawblade connection (F-40-100-00/F-40-101-00)

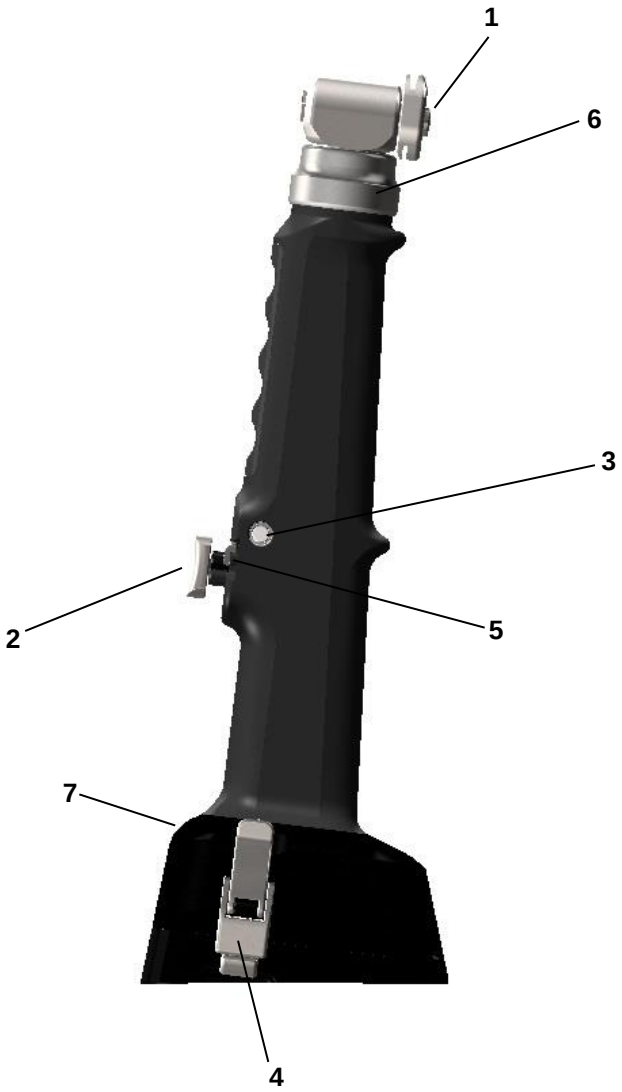

STOP	The slider in the middle position → INTERLOCK / SAFETY POSITION The device cannot be unintentionally started
I	Frequency/CPM set at step “I”
II	Frequency/CPM set at step “II”

1 Locking knob for saw blade tension
2 Trigger for speed regulation / oscillation frequency
3 Slider for switching ON, locking (safety position), ON
4 Locking latches
5 Switch lever to switch the I “Normal” and II “Quick” mode
6 Unlocking sleeve for setting the saw head in 45° steps
7 Sight glass for LED indications and lighting

2.1.6 Straight Oscillating saw Synthes AO connection (F-40-110-00/F-40-111-00)

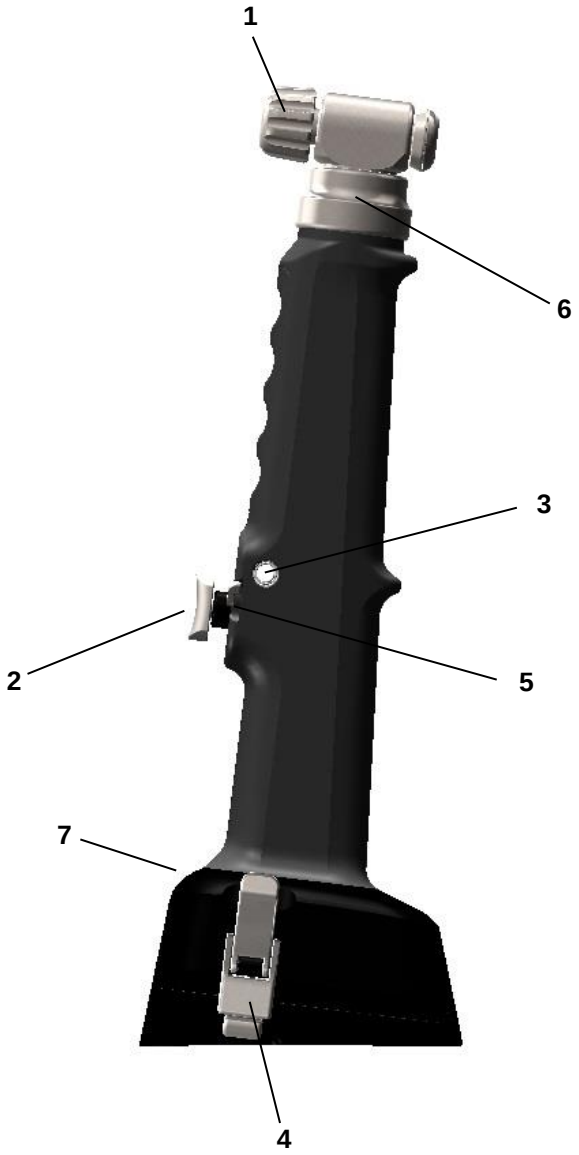

STOP	The slider in the middle position → INTERLOCK / SAFETY POSITION The device cannot be unintentionally started
I	Frequency/CPM set at step “I”
II	Frequency/CPM set at step “II”

1 Locking ring for saw blade tension
2 Trigger for speed regulation / oscillation frequency
3 Slider for switching ON, locking (safety position), ON
4 Locking latches
5 Switch lever to switch the I “Normal” and II “Quick” mode
6 Unlocking sleeve for setting the saw head in 45° steps
7 Sight glass for LED indications and lighting

2.1.7 Sternum saw/ reciprocating saw with keyless chuck (F-31-601-00)

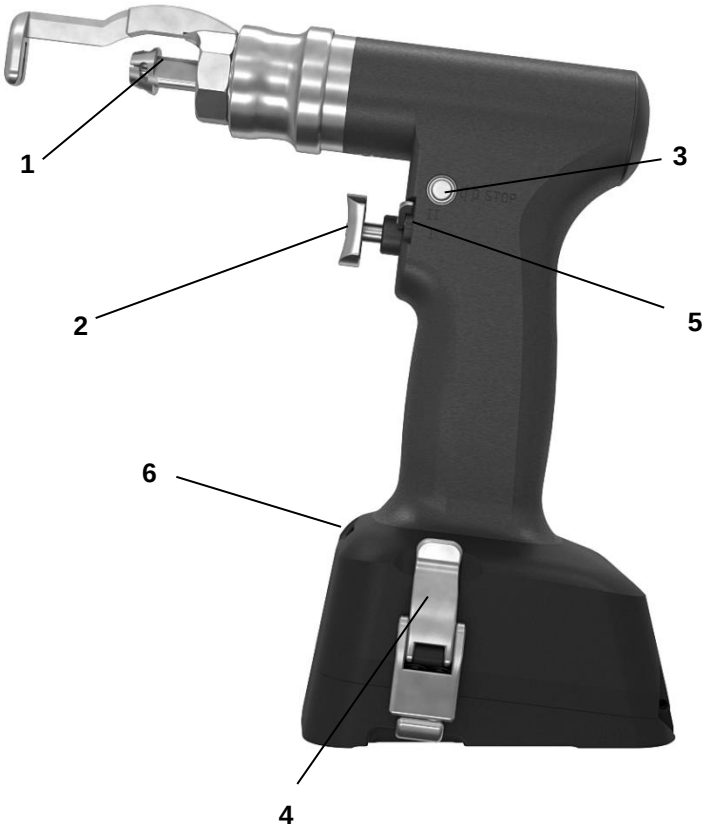

STOP	The slider in the middle position → INTERLOCK / SAFETY POSITION The device cannot be unintentionally started
I	Frequency/CPM set at step "I"
II	Frequency/CPM set at step "II"

1 Sawblade unlocking
2 Trigger for CPM regulation/ oscillation frequency
3 Slider for switching ON, locking (safety position), On
4 Locking latches
5 Switch lever to switch the I "Normal" and II "Quick" mode
6 Sight glass for LED indications and lighting

2.1.8 Oscillating reaming machine (F-31-700-00)

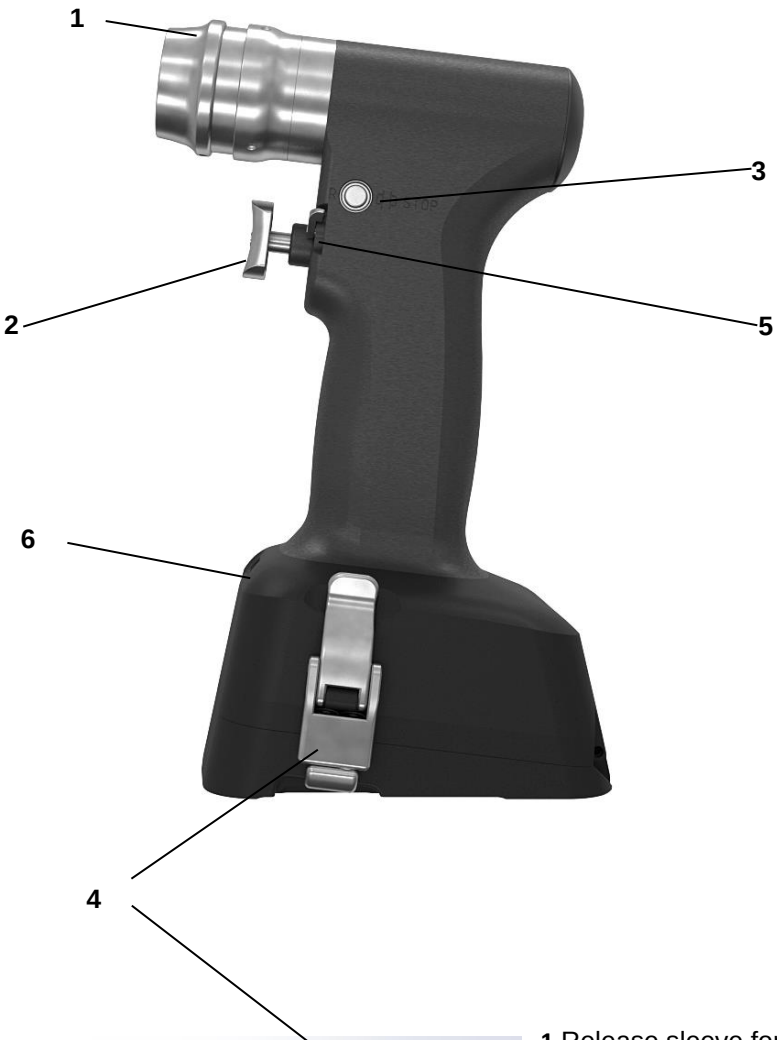

STOP	The slider in the middle position → INTERLOCK / SAFETY POSITION The device cannot be unintentionally started
I	Frequency/RPM set at step “I”
II	Frequency/RPM set at step “II”

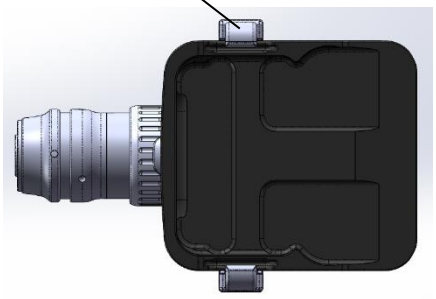

1 Release sleeve for attachments
2 Trigger for speed regulation
3 Slider for switching in the right direction, locking (safety position), left-hand rotation
4 Locking latches
5 Switch lever to switch the I “Normal” and II “Quick” mode
6 Sight glass for LED indications and lighting

2.1.9 Power Pack (F-30-900-00)

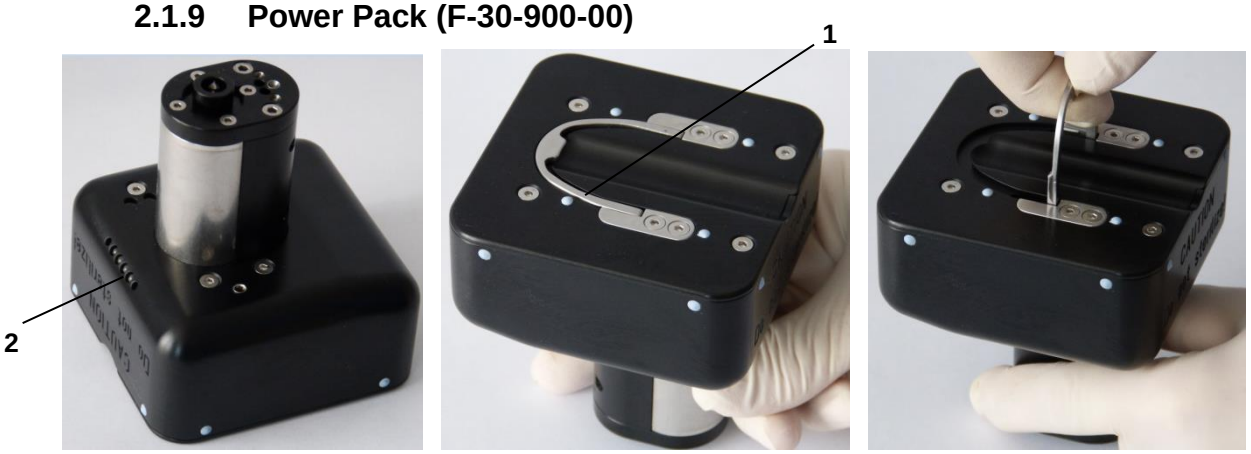

Top bottom Bottom: The lever is extended

1 Extendable lever
2 Sight glass for LED indications and lighting

2.1.10 Charging unit (e.g. F-30-900-50)

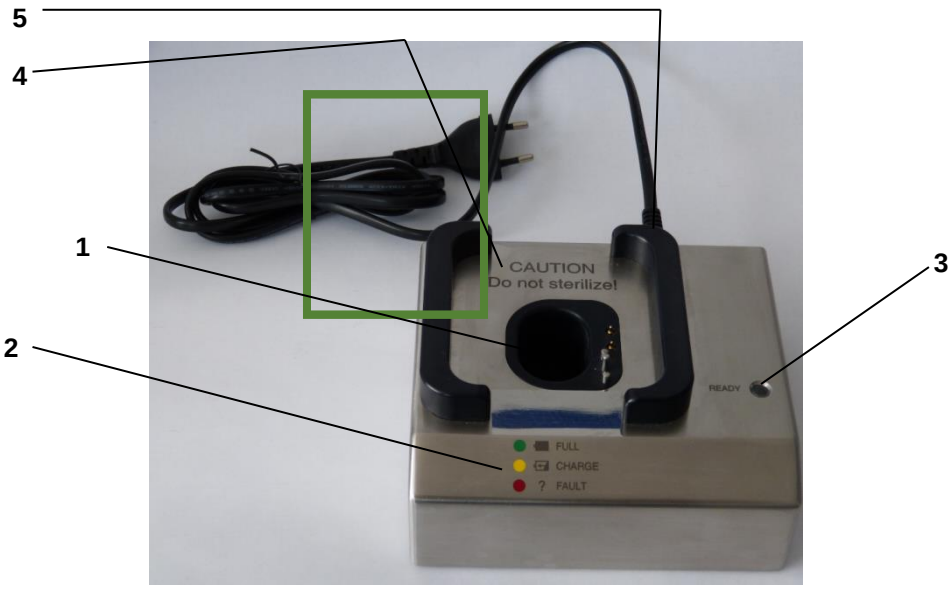

1 Charging slot
2 Power Pack display information
3 Charger display information
4 POAG connection (POAG-connection cable enclosed) on the back of the machine (not shown)
5 Mains connection (Mains connection cable enclosed) on the back of the machine (not shown)

Remark: Further chargers available (dual and quadruple, see the list below).

2.2 Start up

2.2.1 Power pack insertion

Apply the following procedures for all the handpieces.

In order to ensure sterility, the power pack insertion into the sterile housing of the handpiece shall be done by two persons, out of whom, one shall be dressed in sterile clothing:

1.	The “sterile” person holds an open, sterile handpiece with the opened side upwards	
2.	The “sterile” person puts the sterile funnel on the handpiece and ensures its correct positioning. **Remark:** The sterile funnel ensures that the unsterile power pack does not come in direct contact with the outer side of the sterile handpiece.	
3.	The “unsterile” person carefully shifts the unsterile power pack by means of an unfolded mounting bracket through the sterile funnel into the handpiece. Apply firm pressure to the power pack to ensure that it sits correctly in the handpiece. Fold and secure the mounting bracket. During insertion, take care that the power pack is correctly seated and that the “unsterile” person does not touch the outer side of the sterile handpiece.	

4.	The “unsterile” person takes the sterile funnel away from the handpiece	
5.	The person in sterile clothes closes the lid.	
	Hold the handpiece, as shown on the picture and close the latches	

2.2.2 Power pack removal

Apply the following procedures for all the handpieces.

After surgery, remove the power pack from the handpiece and place in the charger.

The handpiece shall require processing (cleaning/sterilisation).

1.	Hold the handpiece as shown in the picture and open the two latches Do not turn the handpiece till the removal of the power pack. **Caution:** Destruction of the power pack with possible consequential damages!	
2.	Grip the lid with the fingers and open	
3.	Unfold the mounting bracket on the power pack and remove it from the handpiece by pulling the mounting bracket. **Remark:** When the power pack is to be replaced during surgery, it shall be removed by the “unsterile” person. In addition, the power pack shall then be placed back in the charger. The handpiece, the attachments/chucks and accessories shall then be submitted to reprocessing.	

Attention:

The power pack shall under no circumstances be immersed, washed or sterilised in a fluid.

Caution: Destruction of the power pack with possible consequential damages!

2.3 Battery capacity

2.3.1 Available battery capacity

The capacity of a fully charged power pack is sufficient to carry out long and complex operations without any need of new charging. (For technical data, see 5.2 Device specification)

The charging status of the power pack is indicated during surgical operations by LED lights (see 2.1.7 Power Pack)

The power pack shall be kept in the charger between operations in order to ensure its full charging and readiness for use at any time.

⚠ **Attention:**

- The device shall be put in operation only with its fully charged power pack. It must be ensured that the power pack has been charged in good time.
It is recommended that the power pack is returned to the charging unit immediately after a given procedure is completed.
Warning: Extension of surgical operation time!

- In case of doubt, check the power pack before use by inserting it into the charger.
Warning: Extension of surgical operation time!

In order to guarantee sterility, the power pack can be replaced during surgical procedure only according to the instructions provided in the User's Manual. (See 2.2.1 Power pack insertion and 2.2.2 Power pack removal)
Warning: Danger for the patient!
- It is imperative that the sterile funnel is sterilised after each use in order to guarantee the system sterility, when a non-sterile Power Pack is inserted into a sterile handpiece.
Warning: Danger for the patient!

- If the power pack was affected by a light mechanic impact or drop, it shall be checked for mechanic damage, cracks, etc. Damaged power packs shall be withdrawn from use and sent for repair. If no visible damages are identified, check the functionality of the power pack in a handpiece.

In order to do so, insert the power pack into the handpiece and close the lid. Activate the trigger for rotation speed control. When the machine is running and all the functions can be activated, it means that the power pack can further be used. In case of functional failure or no function, send the power pack for repair.
Warning: Danger for the patient!

2.3.2 Power pack overheating

The machines get heated under continuous load. In order to avoid exceeding of permissible surface temperature of the device, appropriate cooling phases shall be implemented, see 5.1 Operation cycle.
Warning: Danger for the patient and for the user!

A safety system protects the battery and the motor against overheating damages.

- If the cooling phases are not followed and either the battery or the motor are too hot, then the device shall automatically switch off. The machine shall start again after cooling of the power pack is complete.

⚠ **Attention:**
In case of long-lasting surgical procedures, another device shall be at hand and ready for use or the necessary cooling time shall be taken into account in the course of surgery.

2.3.3 Energy saving function

By means of an integrated switch, the device control shall always switch voltage-free.

No electric energy consuming standby function shall be necessary in the system.

2.4 Power pack, charging, transport and storage

The power pack contains a motor, a battery and an electronic system, so it shall be handled with care.

To ensure that the device is functioning properly, the following points shall be observed:

Charging

- Fully charge the power pack before use. (See Chapter 2.6.3)

- Charge the power pack in ambient temperature between +10°C and +40°C.

Transport

- The power pack may be sent by air fright with charge capacity of 30% max. The sent power packs shall be sent with factory charging to 30%.
If such power pack is inserted into a machine, the yellow indicator will be lit. The power pack can be normally charged on site to 100%.

Remark: If a discharged power pack is charged for approximately 20 minutes, it will achieve the charge capacity level of 30%.

Storage

- Under no circumstances expose the power pack to temperatures above +55°C (see Chapter 5.3)
Caution: Device defect!

- The battery cells of the power pack discharge also minimally when not in use (a physical effect). The power pack shall always be kept in the charger when not in use.

Always check the power pack before use if it is fully charged.

⚠ **Attention:**

- Do not wash, rinse, sterilise, drop or apply any pressure or force. These factors could destroy the power pack with resulting possible damage.
Caution: Device defect!

- The power pack shall be charged exclusively in a charger of the medical bees GmbH (e.g. F-30-900-50).
Caution: Device defect!

- Do not use defective power pack but send it to a competent service station of the medical bees GmbH.
Warning: Danger for the patient and for the user!

- Use the power pack only in the intended handpieces.
Caution: Device defect!

- The power pack shall be opened only by its original manufacturer or by an authorised service station. In case of unauthorised opening, the guarantee shall be cancelled.

2.5 LED light indications

2.5.1 Light indications during handpiece operation

When a handpiece is switched on by activation of the trigger, specific information will be provided and optically indicated. This information is described below. After the trigger release, information will appear for two seconds about battery charge status.

Remark: The indications during power pack charging are described in Chapter 2.6.

Do not look directly in the white lit LEDs.
Warning: Risk of blinding!

2.5.2 The meaning of light indications

2.5.2.1 White lights are continuously on (four lighting LEDs), the trigger activated

The white light indicators signal that the motor is rotating and also serve to light the operation field.

2.5.2.2 White lights are blinking (four lighting LEDs), the trigger activated

Blinking white light indicators signal that the automatic safety switch of the device has tripped because of too high temperatures.

2.5.2.3 Colour light indications, the trigger activated

2.5.2.4 Green light indicator, the trigger activated

The left capacity of the battery is above 50% of its total capacity

2.5.2.5 Yellow light indicator, the trigger activated

The left capacity of the battery is between 10% and 50% of its total capacity

2.5.2.6 Red light indicator, the trigger activated

The left capacity of the battery is below 10% of its total capacity
In order to prevent total discharge of the battery cells, short the automatic safety switch off. No further works are possible in this condition.

Attention:
During surgical procedure, another device shall be at hand and ready for use.

Only fully charged power packs shall be inserted into handpieces.
Warning: Extension of surgical operation time!

2.5.2.7 Red / green light indicator blinking, the trigger activated

Blinking red / green light indicators signal that the automatic safety switch of the device has tripped because of too high temperatures.
The red light symbolises increased temperature, the green light provides information about the left battery capacity; the remaining battery capacity is here above 50% of its total capacity.
Further work shall be possible after the device is cooled down.

⚠ **Attention:**
In case of long-lasting surgical procedures, another device shall be at hand and ready for use or the necessary cooling time shall be taken into account in the course of surgery.

2.5.2.8 Red / yellow light indicator blinking, the trigger activated

Blinking red / yellow light indicators signal that the automatic safety switch of the device has tripped because of too high temperatures.
The red light symbolises increased temperature, the yellow light provides information about the left battery capacity; the remaining battery capacity is here between 10% and 50% of its total capacity.
Further work shall be possible after the device is cooled down.

⚠ **Attention:**
In case of long-lasting surgical procedures, another device shall be at hand and ready for use or the necessary cooling time shall be taken into account in the course of surgery.

2.5.2.9 Red light indicator, the trigger activated

If the light colour changes during operation (the trigger activated) into red, the machine stops and the white light indicators get simultaneously off; it is so because the load is too high and the machine is off for safety reasons. When the load decreases, the machine may be immediately restarted.

If, however, the white LED lights are already blinking, the machine will be switched off for temperature reasons and shall first be cooled down before its operation can be carried on.

2.5.2.10 Light indications with the trigger not activated

(Lighting duration for two seconds after trigger release)

Remark: The light indications after trigger release are visible for two seconds and will then disappear.

The light indications inform about the remaining battery capacity

2.5.2.11 Green light indications

The left capacity of the battery is above 50% of its total capacity

2.5.2.12 Yellow light indications

The left capacity of the battery is between 10% and 50% of its total capacity

2.5.2.13 Red light indications

The left capacity of the battery is below 10% of its total capacity
In order to prevent total discharge of the battery cells, the automatic safety switch is shorted. No further works are possible in this condition.

Attention:
During surgical procedure, another device shall be at hand and ready for use.

Only fully charged power packs shall be inserted into handpieces.
Warning: Extension of surgical operation time!

2.6 Charging units

Use one of the following chargers for power pack charging:
- F-30-900-50 charger with one charging slot
- F-30-900-51 charger with two charging slots
- F-30-900-52 charger with four charging slots

No other chargers can be used. The use of other chargers could damage the power pack. It would also cancel the guarantee.
Caution: Device defect!

2.6.1 Charger start up

Before start up of a charger, make sure there is no power pack in any of the charger slots. Using the delivered POAG-cable, establish a connection between the charger and the equipotential bonding rail of the building.
Connect the charger with the supply mains, using only the delivered mains cable.

The charger is ready for use as soon as the mains cable is plugged into the mains socket. Plugging the cable switches on the green light indicator on top of the charger.

2.6.2 Charger cleaning

Perform cleaning only after the supply cable is unplugged from the mains socket. Wipe the charge occasionally with a dry cloths (using no solution agent).

2.6.3 Power pack charging

1.	The power pack to be charged shall be inserted into a free charger slot, keeping the right orientation. One power pack can be charged per one charger slot. However, all the slots in one charger can be used simultaneously (only in chargers with more than one slot). After automatic recognition of the charging status in the inserted power pack, the charging procedure is started (the power pack indicator is lit yellow / the indicator light of the charger are yellow or reddish).	
2.	As soon as the power pack is fully charged, the charger switches to the maintenance charging mode (the power pack indicator is lit green / the charger's indicator is lit green). The power pack can at any time be picked up from the charger. However, the battery offers its full charge capacity only when the light on the power pack is green.	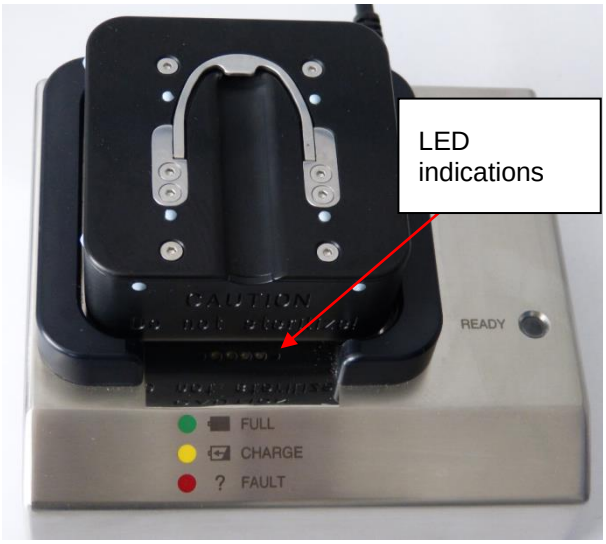

2.6.4 Charge new or longer unused power packs

New power packs and those which were not used longer than for one month and were then not placed in a charger, obtain their maximum capacity only after initial three to five full charging cycles.

2.6.5 Power pack storage

After every use, remove the power pack from the handpiece (drilling machine, saw, ...) and put immediately to charging. Do not store used power packs uncharged. Not used power packs shall always be stored in a charger connected to the supply mains. The charger permanently confirms the charge status, even when it is full (the green light) and switches on the charging mode automatically when needed. In this way, the inserted power packs shall always be fully charged and optimally stored. The power pack may be stored out of the charging slot only when all charging slots are occupied.

Do not use the power packs which have not been directly picked up from a charger and which do not show green indicator light (full charge). The charge status may otherwise be too low for use.
Warning: Extension of surgical operation time!

2.6.6 Charge control indicators on the charger and on the power pack

Each charging slot indicates one yellow (red) or green light. On every power pack, there are control lights (green, yellow, red with the following meaning).

2.6.6.1 The indicator on the charging slot is lit yellow (reddish) and the indicator on the power pack is lit yellow

The power pack is charged.

2.6.6.2 The indicator on the charging slot is lit yellow (reddish) and the indicator on the power pack is lit green

The power pack is ready for operation applications but not charged in 100%.

2.6.6.3 The indicator on the charging slot is lit yellow (reddish) and the indicator on the power pack is lit green

The power pack is ready for operation applications, charged in 100% and should be placed in a charger for optimal storage till use.

2.6.6.4 The red light is lit on the power pack

The power pack is too warm and it has to cool down before charging is automatically resumed. If the power pack is not noticeably heated and the indicator lights are lit longer than 60 minutes, the power pack should be removed from the charger for a moment and again inserted.

If the indications are the same, it means that the power pack is defective and must be sent back to the manufacturer (the medical bees GmbH) for inspection or repair.

2.6.6.5 Power pack light is flashing yellow

The charger is not connected to the supply mains. Remove the power pack from the charger and connect the charger to the mains, then insert the power pack again.

2.6.6.6 No indicator lights are lit on the charger

The charger is either not supplied with voltage or defective. In case of defect, it shall be checked and, possibly repaired by the manufacturer (the medical bees GmbH).

2.6.6.7 No indicator lights are lit on one charging slot (applies to chargers with more than one slot)

The charger slot is either not supplied with voltage or defective. In case of defect, it shall be checked and, possibly repaired by the manufacturer (the medical bees GmbH).

2.6.7 Indications on the power pack after removal from the charger

If the power pack is removed from the charger before full charging, then no indicators are lit on the power pack.

When the power pack is fully charged, its indicator is lit green after removal from the charger. The indications will automatically disappear after two hours or after start in a handpiece. The indications shall inform the surgical team that the power pack is fully charged and ready for use.

2.6.8 Charger disconnection from the mains

Before the mains cable is unplugged from the mains, it shall be ensured there is no power pack in any of the charging slots. When the mains cable is unplugged, then also the POAG-cable can be disconnected from the building's equipotential rail.

⚠ **Attention:**
- After supply failure or a change onto emergency power supply, the charger shall automatically switch on.

- Only F-30-900-00 power packs shall be charged in the charger.
Charging other batteries may pose a fire or explosion hazard.
Warning: Hazard to users!

2.7 Application of drilling / reaming machines (F-31-100-00 and F-31-150-00)

⚠ **Attention:**
- If a drilling / reaming machine is not used during a surgical procedure, put it aside and ensure that it is stored in stable condition and cannot be tilted.
Caution: Device defect!

- For protection against injuries, set the slider in its middle position on

LOCKING / SAFETY POSITION before any mounting/dismantling of cutting tools, as well as before placing the tool back down.
Warning: Danger for the user!

2.7.1 Start up

Depending on application, set the slider to the right or to the left run of the machine.

RPM control is possible with a trigger. Release of the trigger shall stop the machine.

Remark: In case of an F-31-150-00 drilling machine, the drilling mode is non-adjustable.

2.7.2 The oscillating mode on and off

The oscillating mode can be switched on and off with the switch lever. If the switch lever is in the upper position (Symbol), then the oscillating mode is deactivated. If the switch lever is in the bottom position (Symbol), then the oscillating mode is activated.

2.7.3 Mode switching between drilling and reaming (only with F-31-100-00)

Stop the device (by release of the trigger) and remove from the patient.

Secure the device against incidental start

LOCKING / SAFETY POSITION).

In addition, set the rotating ring for the mode switch on the desired position. Move the slider to the right or to the left. Before application of the tool in a patient, ensure that the correct mode is set, therefore, release the device shortly in the air.

The following operation modes are available (only with F-31-100-00):
- Drilling mode (till 1000 RPM max)
- Reaming mode (till 250 RPM max)

⚠ **Attention:**
Do not change the operation mode on a running device.
Caution: Device defect!

2.7.4 Assembly / disassembly of the attachments/chucks for drilling / reaming machines (F-31-100-00 and F-31-150-00)

Remarks:
The following instructions shall apply for all attachments.

⚠ **Attention:**
- When attachments/chucks are mounted/removed, ensure against any incidental start of the machine (

LOCKING / SAFETY POSITION).
Warning: Danger for the user!

- After an attachment or a cutting tool is mounted, check its proper seat by pulling.
Warning: Danger for the user!

- Use exclusively original attachments and tools from the medical bees GmbH or from manufacturers recommended by this Company.
Caution: Device defect!

- Damages, resulting from the use of attachments or cutting tools of other manufacturers, shall not be covered by the warranty.

- Cutting tools shall be cooled with irrigation liquid to prevent heat necrosis
Warning: Danger for the patient!

- Cutting tools shall be used only once.
Warning: Danger for the patient!

- The tools shall be used in the mode recommended by the manufacturer (DRILL till 1000 RPM max / REAM till 250 RPM max) (only for F-31-100-00).
Warning: Danger for the patient!

2.7.5 Attachment mounting

Secure the device against incidental start (the slider shall be set on STOP LOCKING / SAFETY POSITION).
Warning: Danger for the user!

1.	Retract the release sleeve till the stop and hold It is recommended to hold the device in the indicated position.	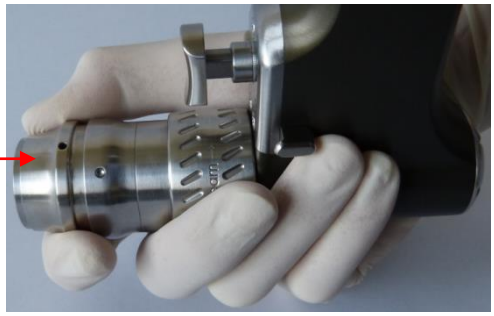
2.	Insert the attachment until you feel it reach the stop.	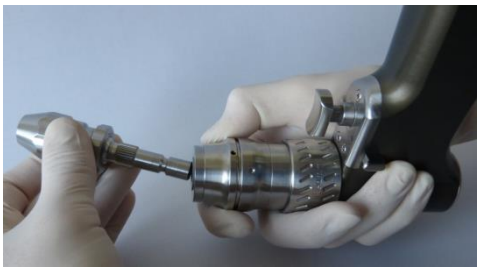
3.	Release the unlocking sleeve. In addition, check the correct seat by light pulling of the attachment.	

Set the rotating ring on the desired operation art (DRILL till 1000 RPM max / REAM till 250 RPM max (only for F-31-100-00).

Before application of the tool in a patient, ensure that the correct mode is set, therefore, release the device shortly in the air.

2.7.6 Mount cutting tools into the attachments / chucks and remove again

See the detailed description of all attachments (Chapter 2.7.)

2.7.7 Attachment removal

Secure the device against incidental start (the slider shall be set on STOP LOCKING / SAFETY POSITION).
Warning: Danger for the user!

It is recommended to hold the device in the indicated position. The tool shall be slightly oriented upwards to avoid its drop.

Retract the release sleeve till the stop and hold Grip the attachment/chuck with the other hand and remove. Release again the release sleeve. Lay aside the removed attachment.	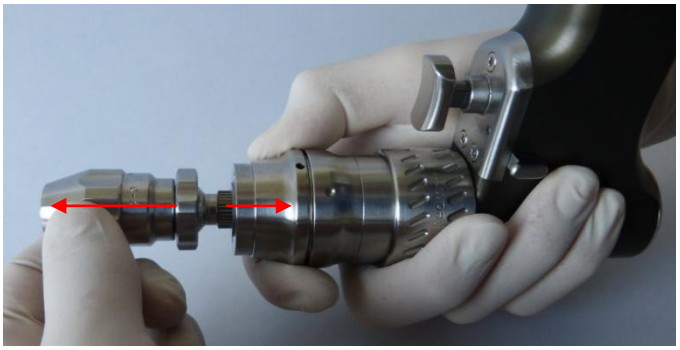

2.7.8 Rotating attachments / chucks

- When attachments/chucks and cutting tools are mounted/removed, ensure protection against any incidental start of the machine (STOP LOCKING / SAFETY POSITION).
Warning: Danger for the user!

2.7.8.1 Drill chuck with a key (F-30-100-60, F-30-100-61, F-30-100-62)

Rotation speed: 1000 RPM max (DRILL mode / 250 RPM max (REAM mode)

Clamping width: for F-30-100-60 till Ø 4 mm
for F-30-100-61 till Ø 6.5 mm
for F-30-100-62 till Ø 7 mm

Cannulation: 4.3 mm

2.7.8.2 Assembly and disassembly of cutting tools

Open the drill chuck with the delivered key, hold the rear ring of the drill chuck and rotate the front ring in clockwise direction. Mount / dismount the cutting tool till closure, hold the rear ring of the drill chuck and rotate the front ring in counter clockwise direction. Fasten with the key.	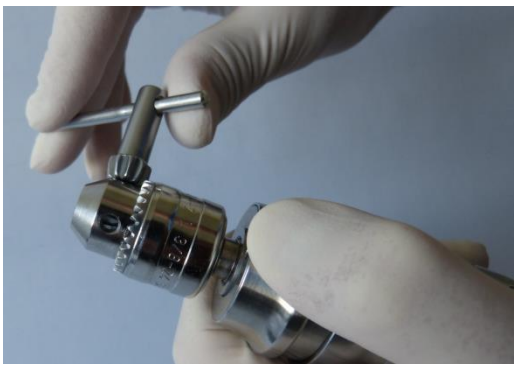

2.7.8.3 Drill chuck, keyless (F-30-100-63, F-30-100-64, F-30-100-65)

Rotation speed: 1000 RPM max (DRILL mode / 250 RPM max (REAM mode)

Clamping width: for F-30-100-63 till Ø 6 mm (with locking)
for F-30-100-64 till Ø 6 mm
for F-30-100-65 till Ø 3.5 mm
for F-30-100-66 till Ø 10 mm
Cannulation: 4.3 mm

2.7.8.4 Assembly and disassembly of cutting tools

In order to open the drill chuck, retract the locking sleeve and hold (only for F-30-100-63) and, additionally, rotate the front ring in clockwise direction. For closing, it is not necessary to retract the locking sleeve, rotate the front ring in the counter clockwise direction.	
In case of F-30-100-64 and F-30-100-65, in order to open the chuck, hold firmly the rear ring of the drill chuck and rotate the front ring in the clockwise direction. Mount / dismount the cutting tool till closure, hold the rear ring of the drill chuck and rotate the front ring in counter clockwise direction.	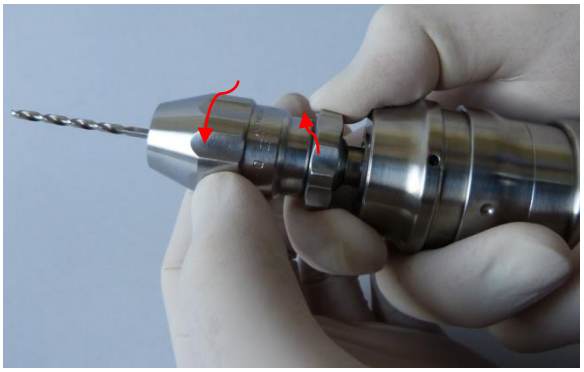

⚠ **Attention:**
Under no circumstances shall drive units be switched on to close the attachments.
Warning: Danger for the user!

2.7.8.5 Quick-action coupling for cutting tools

2.7.8.6 AO chuck, small (F-30-100-50)

Rotation speed: 1000 RPM max (DRILL mode / 250 RPM max (REAM mode)
Cannulation: 2.5 mm

2.7.8.7 AO adapter big (F-30-100-51)

Rotation speed: 1000 RPM max (DRILL mode / 250 RPM max (REAM mode)
Cannulation: 4.3 mm

2.7.8.8 ¼´´-Adapter (F-30-100-52)

Rotation speed: 1000 RPM max (DRILL mode / 250 RPM max (REAM mode)
Cannulation: 4.3 mm

2.7.8.9 Hudson chuck (F-30-100-53)

Rotation speed: 1000 RPM max (DRILL mode / 250 RPM max (REAM mode)
Cannulation: 4.3 mm

2.7.8.10 Harris chuck (F-30-100-54)

Rotation speed: 1000 RPM max (DRILL mode / 250 RPM max (REAM mode)
Cannulation: 4.3 mm

2.7.8.11 Hexagonal chuck, SW6 (F-30-100-55)

Rotation speed: 1000 RPM max (DRILL mode / 250 RPM max (REAM mode)
Cannulation: 4.3 mm

2.7.8.12 DIN Coupling (F-30-100-56)

2.7.8.13 Zimmer-Hall Coupling (F-30-100-57)

2.7.8.14 Assembly and disassembly of cutting tools

Mounting: Insert the cutting tool with a light pressure and rotation forwards in the chuck. Simultaneously, move the coupling sleeve of the chuck backwards. When the cutting tool reaches the stop, release the coupling sleeve. Confirm the firm seat of the tool by pulling it slightly.	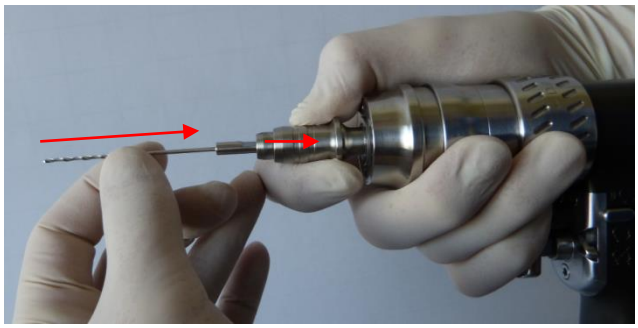

Dismantling: In order to remove the cutting tool, move the coupling sleeve of the chuck backwards and take out the tool.	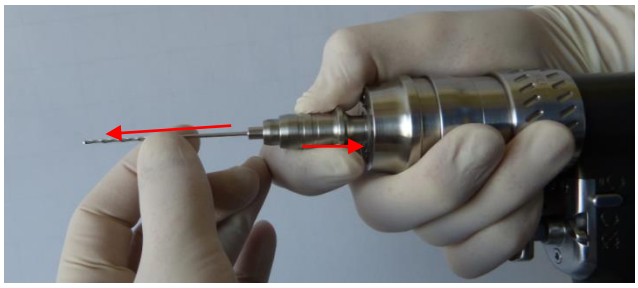

⚠ **Attention:**
- To insert screws, set the drive sleeve to the REAM mode.
Caution: Device defect!

- Insertion of screws with the driving unit calls for special care.
Screw the screws not completely by means of the driving unit. The last screw rotations or fastening should always be done by hand.
Warning: Danger for the patient!

2.7.8.15 Assembly and disassembly of cutting tools

Move the coupling sleeve backwards and insert/take out completely the tool with its slight rotation.	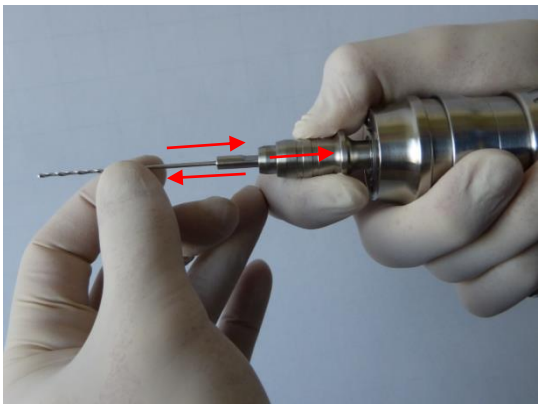

⚠ **Attention:** The medical bees GmbH shall take no responsibility for the performance and results with the use of tools from another manufacturer.

2.7.8.16 Quick-action coupling for Kirschner wires (F-30-100-10 and F-30-100-15)

For insertion/removal of Kirschner wires of any length and in diameter from 1.0 till 4.0 mm.

Rotation speed: 1000 RPM max (DRILL mode / 250 RPM max (REAM mode)
Cannulation: 4.0 mm (fully opened)

For insertion and removal of Kirschner wires, set the driving sleeve on the DRILL mode.

Use F-30-100-10 attachment with 31-100-00 drilling / reaming machine only.
Use F-30-100-15 attachment with F-31-150-00 drilling machine only.
Caution: The function is not guaranteed!

2.7.8.17 Kirschner wire insertion into the attachment/chuck

1.	Set the adjusting sleeve on the front end of the attachment/chuck to the diameter of the Kirschner wire to be inserted.	

2.	Insert the Kirschner wire into the attachment/chuck The Kirschner wire will be slightly clamped and held in the selected position.	

2.7.8.18 Kirschner wire insertion into bones

Pull the lever to the handpiece in order to clamp the Kirschner wire and activate the trigger (with the slider moved for clockwise run). If needed, release the lever in order to adjust the position of the Kirschner wire in the attachment/chuck.	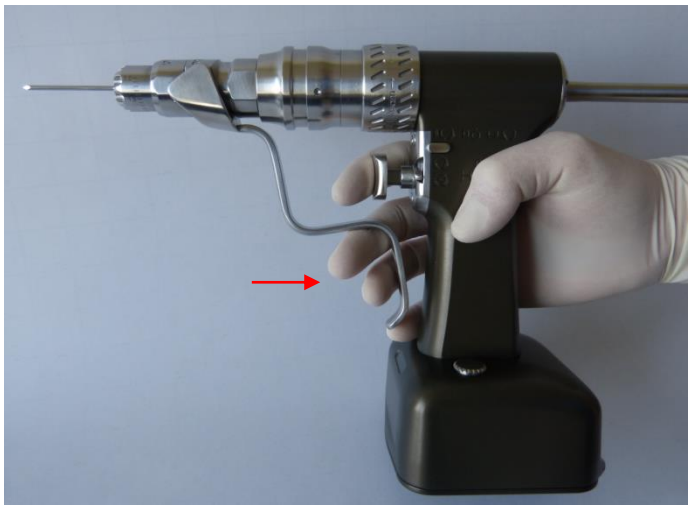

2.7.8.19 Removal of Kirschner wire from bones

Set the required diameter on the adjustment sleeve of the attachment/chuck. Move the adjustment sleeve and the attachment/chuck above the Kirschner wire. Pull the lever to the handpiece in order to clamp the Kirschner wire and activate the trigger (with the slider moved for counter clockwise run) in order to pull the wire from the bone.

2.7.8.20 Extension sleeve for Kirschner wires (F-30-100-19)

With long Kirschner wires, which exceed the device dimensions and, at the back, protrude from its lid, an extension sleeve (F-30-100-19) shall always be used.
Warning: Danger for the user!

Fix an extension sleeve in the lid of the device run.	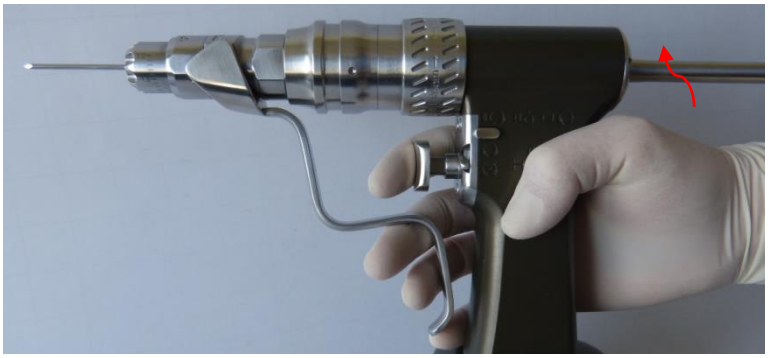

In general, the extension sleeves shall be used during all works with quick-action couplings (Kirschner wires).
Warning: Danger for the user!

2.7.8.21 Adapter for radiolucent angular gear (F-30-100-25)

Rotation speed: 1000 RPM max (DRILL mode)

2.7.8.22 Mounting of radiolucent angular gear on the drive unit

1.	Mount an adapter (F-30-100-25) for the radiolucent angular gear of Synthes on the handpiece. In addition, move the radiolucent angular gear through the adapter till stop.	
2.	The radiolucent angular gear (rotate into the desired working position. Hold the radiolucent angular gear with the free hand.	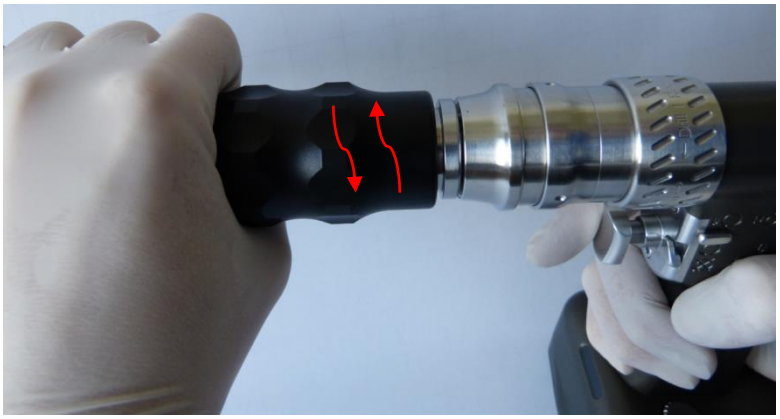

In order to remove the radiolucent angular gear, repeat the procedure in reverse order.

⚠ **Attention:**
- Firmly hold the radiolucent angular gear, mounted on the drive unit, when the device is directed downwards.
Caution: Device defect!

- Special 3-lip spiral drills shall exclusively be used. The Synthes Company shall be the reference source.
Warning: Danger for the patient!

- Always handle the radiolucent angular gear with the highest care. A drill shall not come in contact with an intramedullary nail.
Warning: Danger for the patient!

- Depending on the setting of the image intensifier, a zone may appear in the rear of the radiolucent drive which is not radiolucent. This, however, does not in any way affect either the goals or the operations undertaken with the device.

- For protection of the gear transmission, the radiolucent gear is equipped with a slipping clutch which shall disengage in overloading. It is recognisable by some clattering noise.

- The following procedures may lead to overloads:

--- Correction of drilling angle, when the cutting grooves of the drill are fully inserted into the bone.
Warning: Danger for the patient and for the user!
Caution: Device defect!

- Drill jamming by drilling of a spike
Warning: Danger for the patient!
Caution: Device defect!

- It shall be possible to continue operation after the following correction measures:

- Drill/ Boring angle correction: Pull out the drill till the cutting grooves are visible and start the drilling procedure again.

- Drill/Boring of a spike: Pull out the drill till the cutting grooves are visible, start drilling again or, if necessary, replace the drill.

2.8 Application of oscillating saws Synthes AO saw blade connection (F-31-300-00; F-31-301-00)

⚠ **Attention:**

- If a saw is not used during a surgical procedure, put it aside and ensure that it is stored in stable condition and cannot be tilted.

Caution: Device defect!

- For protection against injuries, set the slider in its middle position on STOP LOCKING / SAFETY POSITION before any mounting/dismantling of cutting tools, as well as before placing the tool back down.

Warning: Danger for the user!

2.8.1 Start up of oscillating saws

Place the slider at EIN (ON) position (the slider to be moved to the left or to the right).

The oscillation frequency can be set with the CPM controlling trigger. Release of the trigger shall stop the machine.

Maximum stroke frequency can be preset with the switch lever. If the switch lever is set on position I, the “normal” mode shall be selected. Position II corresponds to the “fast” mode preset.

2.8.2 Saw head positioning

The saw head can be locked in eight different positions (45° division).

In order to set the desired position, pull back the sleeve for saw head positioning and rotate the head into the desired position. Release the sleeve. Rotate the saw head slightly to the left or to the right till it snaps in the exact position.	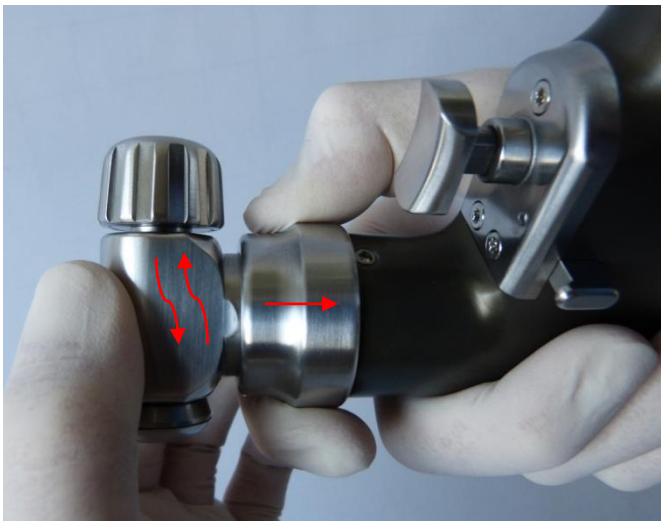

⚠ **Attention:**

- In order to position the saw head, the slider shall be set to STOP LOCKING / SAFETY POSITION.

Warning: Danger for the user!

- In order to avoid injuries during saw head positioning, keep always the saw head, together with the assembled saw blade away from the body.

Warning: Danger for the user!

2.8.3 Replacement of saw blades

Saw blades with the Synthes AO connection shall exclusively be used.

Warning: Danger for the patient and for the user!

Caution: Device defect!

The medical bees GmbH recommends saw blades of the Gomina AG Company, Risa GmbH Company or mahe medical GmbH company; the use of saw blades of other manufacturers shall not be covered by the guarantee. These saw blades are optimally customised to the requirements. Other products may reduce service and functional life of the system.
Caution: Device defect!

- For protection against injuries, set the slider to STOP LOCKING / SAFETY POSITION before any mounting/dismantling of cutting tools.
Warning: Danger for the user!

1.	Open the saw blade quick-action coupling by rotation of the locking ring in the counterclockwise direction.	
2.	Lift the saw blade and remove	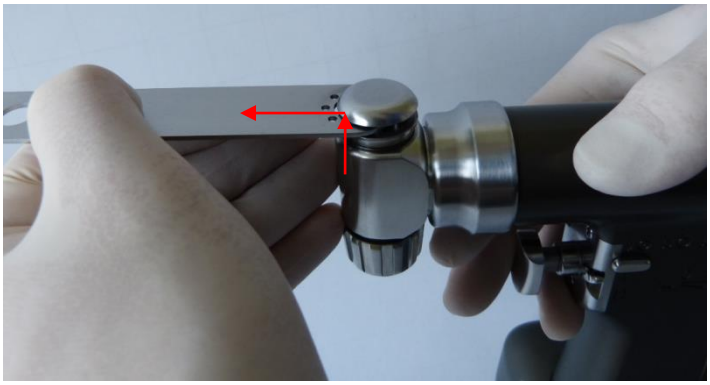
3.	Insert a new saw blade and set in the required position. The saw blade may be locked in five different positions.	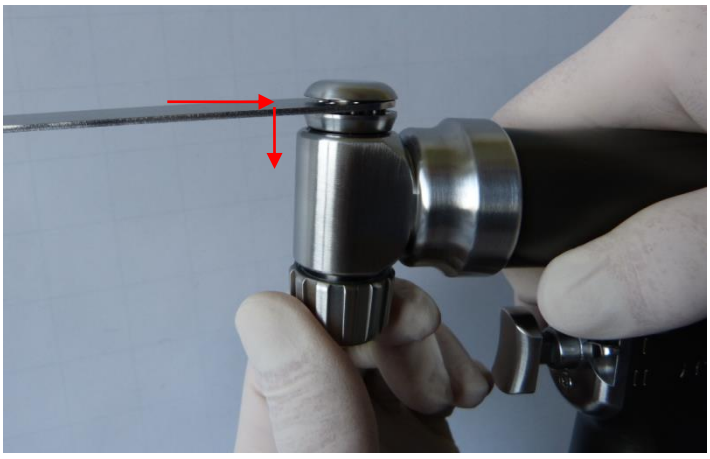

4.	Rotate the locking ring in clockwise position to close the saw blade quick-action coupling. Ensure that the locking ring is securely tightened. Otherwise, the screws may get loose and the saw blade may flutter.	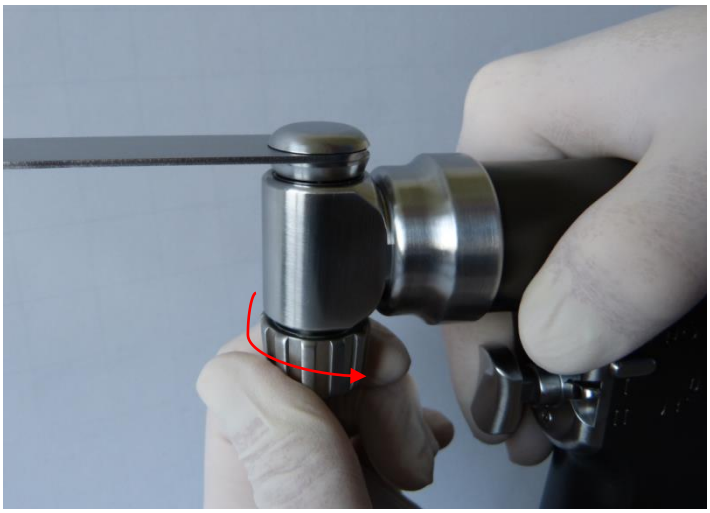

2.8.4 Application of oscillating saws

The device shall be started and run in the air before touch-down on bones. Do not apply any excessive pressure on the saw blade to avoid jamming. For optimal sawing performance, move the device slightly back and forth along the plane of the saw, so that the blade swings a little above the bone. Smooth and steady operation of the saw ensures very precise cutting. Inaccurate cuts result from worn saw blades, excessive pressure or tilting of the blade.
Warning: Danger for the patient!

2.8.5 Recommendations for handling of saw blades

In order to obtain optimal results, the medical bees GmbH requires that a new saw blade is used for every surgical procedure. In this way, it is assured that saw blades shall always be sharp and clean. Worn saw blades pose the following risks:
- Necrosis by strong heat development
-Infections by deposits
-Longer cutting time because of reduced saw performance
Warning: Danger for the patient!

Under the following conditions, noises and vibrations can deviate from normal values:
- The use of untypical saw blades
- Vertical saws
- The use of tools in poor condition
- The use of saw blades of other manufacturer

Saw blades shall always be flushed with a coolant to avoid heat necrosis.
Warning: Danger for the patient!

2.9 Application oscillating saw Stryker saw blade connection (F-31-310-00, F-31-311-00)

Attention:
- If a saw is not used during a surgical procedure, put it aside and ensure that it is stored in stable condition and cannot be tilted.

Caution: Device defect!

- For protection against injuries, set the slider in its middle position on STOP LOCKING / SAFETY POSITION before any mounting/dismantling of cutting tools, as well as before placing the tool back down.
Warning: Danger for the user!

2.9.1 Start-up of oscillating saw

Place the slider at EIN (ON) position (the slider to be moved to the left or to the right).

The oscillation frequency can be set with the CPM controlling trigger. Release of the trigger shall stop the machine.

Maximum stroke frequency can be preset with the switch lever. If the switch lever is set on position I, the “normal” mode shall be selected. Position II corresponds to the “fast” mode preset.

2.9.2 Saw head positioning

The saw head can be locked in eight different positions (45° division).

In order to set the desired position, pull back the sleeve for saw head positioning and rotate the head into the desired position. Release the sleeve. Rotate the saw head slightly to the left or to the right till it snaps in the exact position.	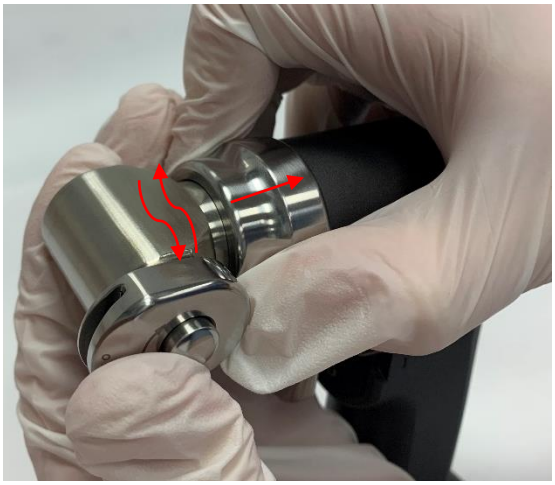

⚠ **Attention:**

- In order to position the saw head, the slider shall be set to STOP LOCKING / SAFETY POSITION.
Warning: Danger for the user!

- In order to avoid injuries during saw head positioning, keep always the saw head, together with the assembled saw blade away from the body.
Warning: Danger for the user!

2.9.3 Replacement of saw blades

Saw blades with the Stryker connection shall exclusively be used.
Warning: Danger for the patient and for the user!
Caution: Device defect!

The medical bees GmbH recommends saw blades of the Gomina AG Company, Risa GmbH Company or mahe medical GmbH company; the use of saw blades of other manufacturers shall not be covered by the guarantee. These saw blades are optimally customised to the requirements. Other products may reduce service and functional life of the system.
Caution: Device defect!

- For protection against injuries, set the slider to STOP LOCKING / SAFETY POSITION before any mounting/dismantling of cutting tools.
Warning: Danger for the user!

1.	Open the saw blade quick coupling by pressing the push button.	
2.	Keep the push button pressed and remove the saw blade.	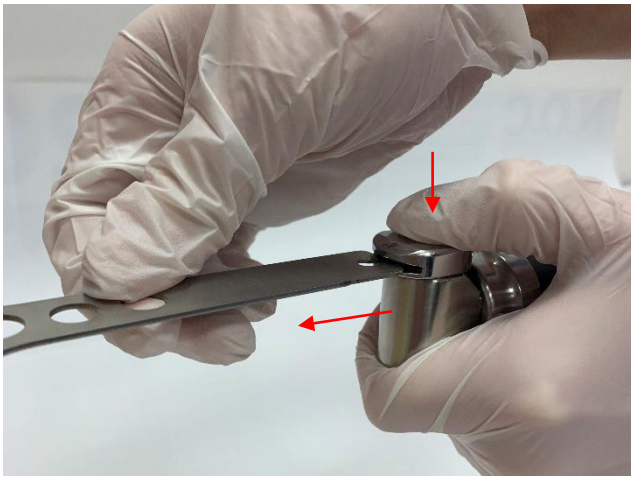
3.	To insert the new saw blade, the push button must be pressed again and the saw blade inserted.	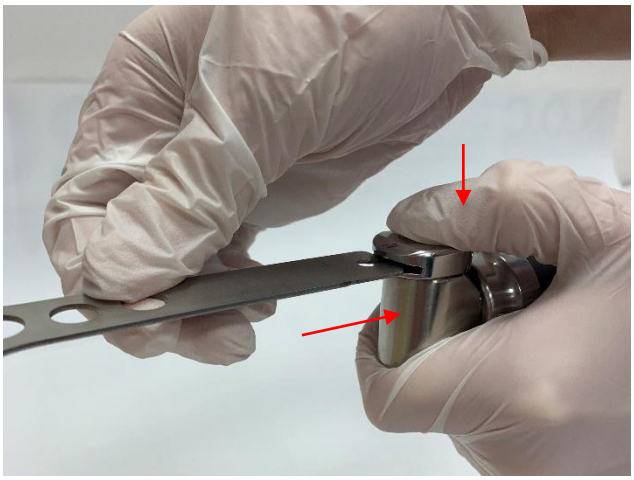

4.	After the saw blade has been inserted, the push button must be released. To check the secure positioning of the saw blade, it must be moved back and forward. If it does not fit properly, the push button does not click into the saw blade, or detaches from the saw head.	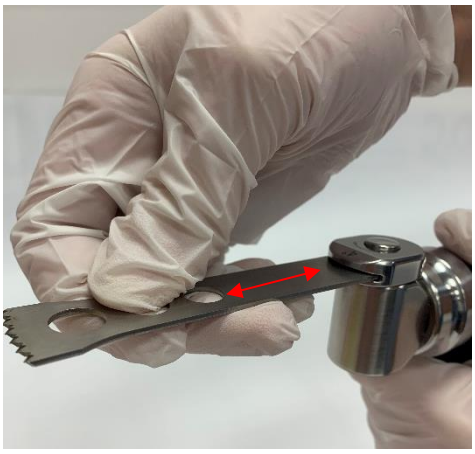

2.9.4 Application of oscillating saws

The device shall be started and run in the air before touch-down on bones. Do not apply any excessive pressure on the saw blade to avoid jamming. For optimal sawing performance, move the device slightly back and forth along the plane of the saw, so that the blade swings a little above the bone. Smooth and steady operation of the saw ensures very precise cutting. Inaccurate cuts result from worn saw blades, excessive pressure or tilting of the blade.
Warning: Danger for the patient!

2.9.5 Recommendations for handling of saw blades

In order to obtain optimal results, the medical bees GmbH requires that a new saw blade is used for every surgical procedure. In this way, it is assured that saw blades shall always be sharp and clean. Worn saw blades pose the following risks:
- Necrosis by strong heat development
-Infections by deposits
-Longer cutting time because of reduced saw performance
Warning: Danger for the patient!

Under the following conditions, noises and vibrations can deviate from normal values:
- The use of untypical saw blades
- Vertical saws
- The use of tools in poor condition
- The use of saw blades of other manufacturer

Saw blades shall always be flushed with a coolant to avoid heat necrosis.
Warning: Danger for the patient!

Handling for straight saws F-40-100-00, F-40-101-00, F-40-110-00, F-40-111-00 is basically the same as for the oscillating saws F-31-3xx-xx

2.10 Application of reciprocating saw (F-31-601-00)

⚠ **Attention:**
- If a saw is not used during a surgical procedure, put it aside and ensure that it is stored in stable condition and cannot be tilted.
Caution: Device defect!

- For protection against injuries, set the slider in STOP LOCKING / SAFETY POSITION before any mounting/dismantling of cutting tools, as well as before placing the tool back down.
Warning: Danger for the user!

2.10.1 Start up of reciprocating saw

Place the slider at EIN (ON) position.

The sawing stroke frequency can be set with the CPM controlling trigger. Release of the trigger shall stop the machine.

Maximum stroke frequency can be preset with the switch lever. If the switch lever is set on position I, the “normal” mode shall be selected. Position II corresponds to the “fast” mode preset.

2.10.2 Replacement of saw blades

Saw blades with the Stryker connection shall exclusively be used.
Warning: Danger for the patient and for the user!
Caution: Device defect!

The medical bees GmbH recommends saw blades of the Gomina AG Company or the Risa GmbH Company; the use of saw blades of other manufacturers shall not be covered by the guarantee. These saw blades are optimally customised to the requirements. Other products may reduce service and functional life of the system.
Caution: Device defect!

- For protection against injuries, set the slider in its middle position on STOP LOCKING / SAFETY POSITION before any mounting/dismantling of cutting tools.
Warning: Danger for the user!

1.	Retract the release sleeve till the stop and hold	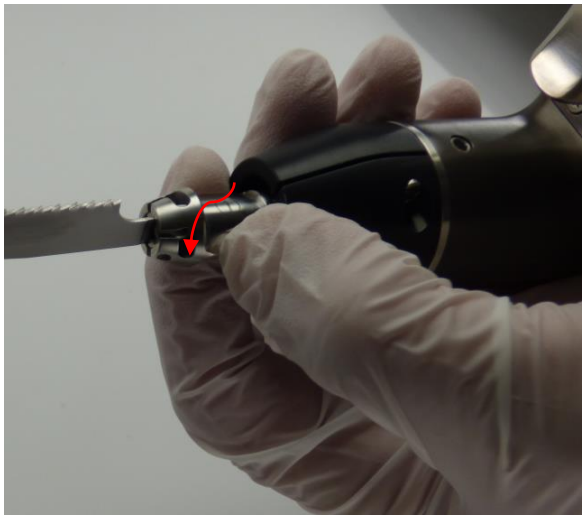
2.	Pull out the attachment/chuck.	

3.	Rotate the attachment/chuck to the desired position. Locking always at 90°	
4.	Insert the attachment/chuck until you feel it reach the stop.	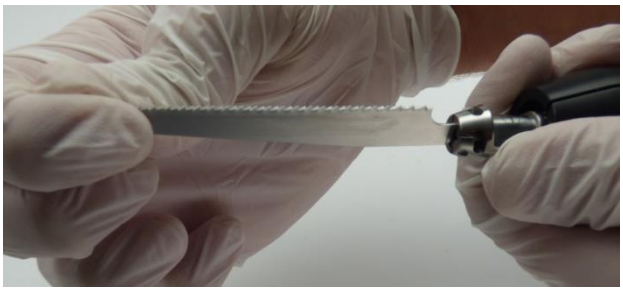

2.10.3 Works with saw blades

The Device shall be started before touch-down. Do not apply any excessive pressure on the saw blade to avoid jamming. Smooth and steady operation of the saw ensures very precise cutting. Inaccurate cuts result from worn saw blades, excessive pressure or tilting of the blade.
Warning: Danger for the patient!

2.10.4 Recommendations for handling of saw blades

In order to obtain optimal results, the medical bees GmbH requires that a new saw blade is used for every surgical procedure. In this way, it is assured that saw blades shall always be sharp and clean. Worn saw blades pose the following risks:
- Necrosis by strong heat development
- Infections by deposits
- Longer cutting time because of reduced saw performance
- Defect of sawhead possible

Warning: Danger for the patient!

Under the following conditions, noises and vibrations can deviate from normal values:
- The use of untypical saw blades
- The use of tools in poor condition
- The use of saw blades of other manufacturer

Saw blades shall always be flushed with a coolant to avoid heat necrosis.
Warning: Danger for the patient!

2.11 Application of sternum saws (F-31-601-00)

⚠ **Attention:**
- If a saw is not used during a surgical procedure, put it aside and ensure that it is stored in stable condition and cannot be tilted.

Caution: Device defect!

- For protection against injuries, set the slider in its middle position on

LOCKING / SAFETY POSITION before any mounting/dismantling of cutting tools, as well as before placing the tool back down.
Warning: Danger for the user!

2.11.1 Start-up of sternum saw

Place the slider at EIN (ON) position.

The sawing stroke frequency can be set with the CPM controlling trigger. Release of the trigger shall stop the machine.

Maximum stroke frequency can be preset with the switch lever. If the switch lever is set on position I, the “normal” mode shall be selected. Position II corresponds to the “fast” mode preset.

2.11.2 Replacement of saw blades

Saw blades with the Stryker connection shall exclusively be used.
Warning: Danger for the patient and for the user!
Caution: Device defect!

The medical bees GmbH recommends saw blades of the Gomina AG Company or the Risa GmbH Company; the use of saw blades of other manufacturers shall not be covered by the guarantee. These saw blades are optimally customised to the requirements. Other products may reduce service and functional life of the system.
Caution: Device defect!

Saw blade replacement with the sternum attachment corresponds to that of reciprocating saws. Move the saw blade through the bottom of the attachment.

⚠ **Attention:**
- A saw blade, specially intended for the sternum attachment, shall exclusively be used. The length of the saw blade shall be matched to the sternum attachment.

2.11.3 Works with sternum saws

The device shall be started before touch-down. Do not apply any excessive pressure on the saw blade to avoid jamming. Smooth and steady operation of the saw ensures very precise cutting. Inaccurate cuts result from worn saw blades, excessive pressure or tilting of the blade.
Warning: Danger for the patient!

2.11.4 Recommendations for handling of saw blades

In order to obtain optimal results, the medical bees GmbH requires that a new saw blade is used for every surgical procedure. In this way, it is assured that saw blades shall always be sharp and clean. Worn saw blades pose the following risks:
- Necrosis by strong heat development
- Infections by deposits
- Longer cutting time because of reduced saw performance
- Defect of saw head possible

Warning: Danger for the patient!

Under the following conditions, noises and vibrations can deviate from normal values:
- The use of untypical saw blades
- The use of tools in poor condition
- The use of saw blades of other manufacturer

Saw blades shall always be flushed with a coolant to avoid heat necrosis.
Warning: Danger for the patient!

2.11.5 Keyless version (F-31-601-00)

⚠ **Attention:**

Rotate the clamp in case of the keyless version (F-31-601-00)

1.	Retract the release sleeve till the stop and hold	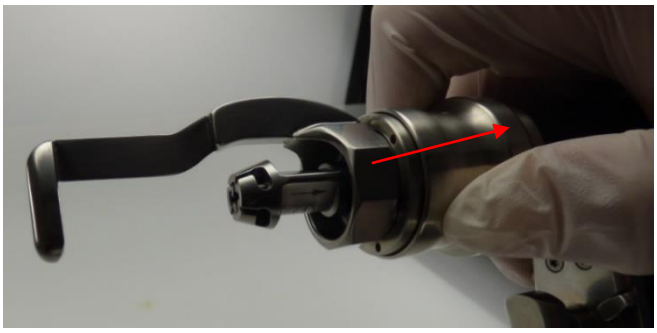
2.	Pull out the attachment/chuck.	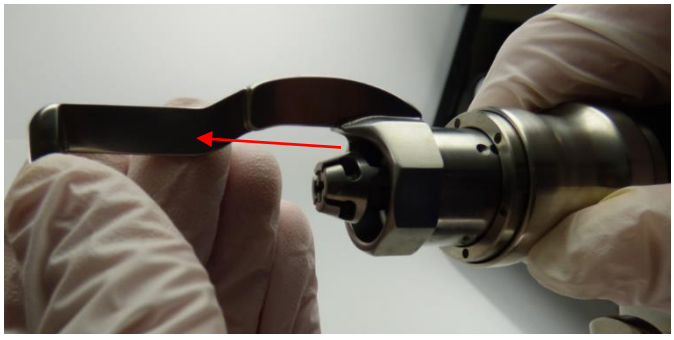
3.	Rotate the attachment/chuck to the desired position. Locking always at 90°	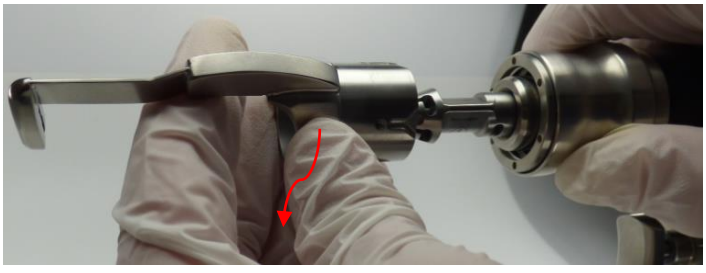

4.	Insert the attachment/chuck until you feel it reach the stop.	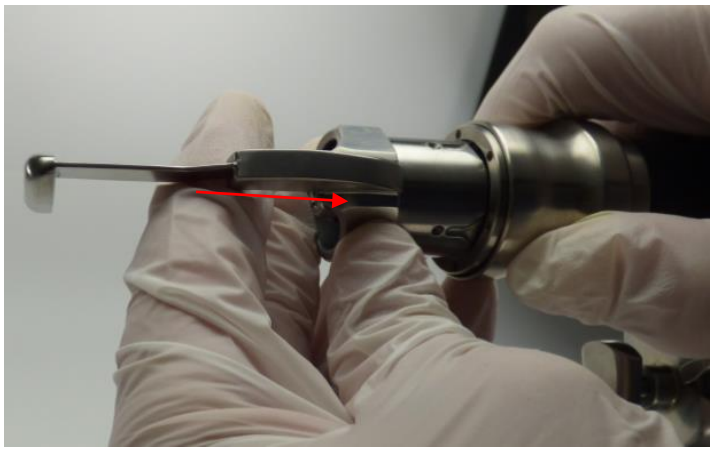
5.	Release the unlocking sleeve. In addition, check the correct seat by light pulling of the clamp.	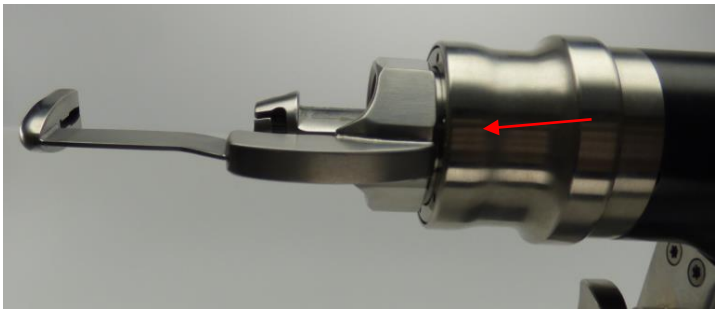

2.12 Application of oscillating reaming machine (F-31-700-00)

⚠ **Attention:**
- If the oscillating reaming machine is not used during a surgical procedure, put it aside and ensure that it is stored in stable condition and cannot be tilted.
Caution: Device defect!

- For protection against injuries, set the slider in its middle position on LOCKING / SAFETY POSITION before any mounting/dismantling of cutting tools, as well as before placing the tool back down.
Warning: Danger for the user!

2.12.1 Start up

Depending on application, set the slider to the right or to the left run of the machine.

RPM control is possible with a trigger. Release of the trigger shall stop the machine.

Maximum RPM can be preset with the switch lever. If the switch lever is set on position I, the “normal” mode shall be selected. Position II corresponds to the “fast” mode preset.

2.12.2 Mounting/dismounting of a tool

Remarks:
The following instructions shall apply for all tools.

⚠ **Attention:**
- When cutting tools are mounted/removed, ensure against any incidental start of the machine (LOCKING / SAFETY POSITION).
Warning: Danger for the user!

- After a cutting tool is mounted, check its proper seat by pulling.
Warning: Danger for the user!

- Use exclusively original tools from the medical bees GmbH or from manufacturers recommended by this Company.
Caution: Device defect!

- Damages, resulting from the use of cutting tools of other manufacturers, shall not be covered by the warranty.

- Cutting tools shall be cooled with irrigation liquid to prevent heat necrosis
Warning: Danger for the patient!

- Cutting tools shall be used only once.
Warning: Danger for the patient!

2.12.3 Cutting tool mounting

Secure the device against incidental start (the slider shall be set on STOP LOCKING / SAFETY POSITION).
Warning: Danger for the user!

1.	Retract the release sleeve till the stop and hold It is recommended to hold the device in the indicated position.	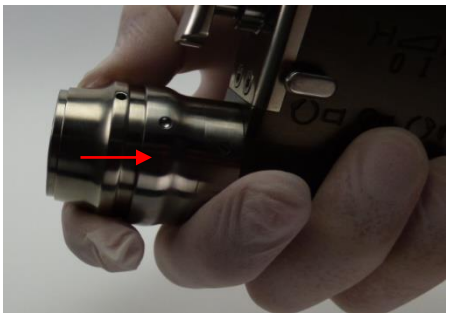
2.	Insert the tool until you feel it reach the stop.	
3.	Release the unlocking sleeve. In addition, check the correct seat by light pulling of the tool.	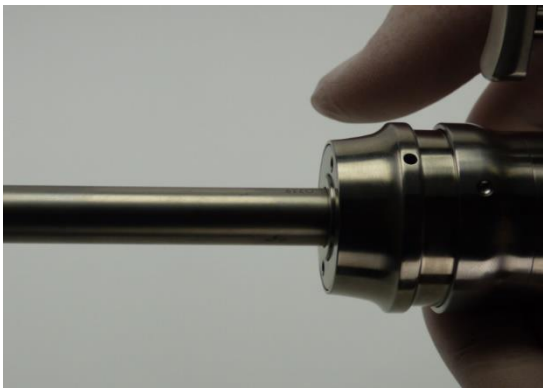

Before application of the tool in a patient, ensure that the correct mode is set, therefore, release the device shortly in the air.

2.12.4 Cutting tool dismounting

Secure the device against incidental start (the slider shall be set on STOP LOCKING / SAFETY POSITION).
Warning: Danger for the user!

It is recommended to hold the device in the indicated position. The tool shall be slightly oriented upwards to avoid its drop.

Retract the release sleeve till the stop and hold Grip the attachment/chuck with the other hand and remove. Release again the release sleeve. Put aside the dismounted tool.	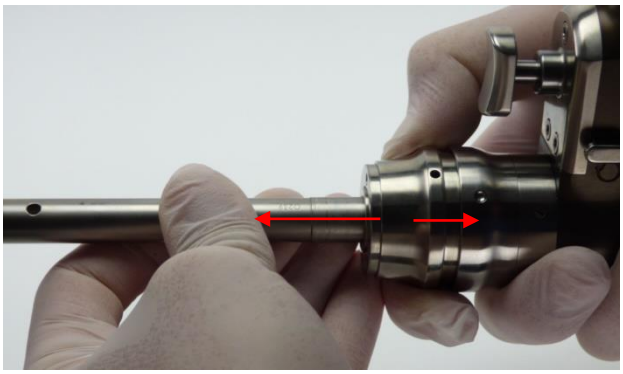

3 Care and maintenance (after validated cleaning and sterilisation procedures)

3.1 General information

Drive units and attachments are exposed to frequent mechanical loads and shocks during use and should not be expected to last indefinitely. Proper use and regular maintenance extend service life of surgical tools and instruments.

Repeated clinical reprocessing has a minimal effect on the service life of the drive units and attachments. Careful care and maintenance, as well as thorough oiling can significantly increase the reliability and durability of the system components.

The medical bees GmbH recommends annual inspections and maintenance, either by the original manufacturer or a selected authorised service station. The manufacturer shall assume no responsibility for any defects / failures, arising either from improper handling of the devices or from their unauthorised maintenance. Assuming proper handling and authorised maintenance of the device, its service life shall be, at least, 5 years.

⚠ **Attention:**

- Clinical processing shall always be done immediately after use.
Caution: Device defect!

- Cannulations, release sleeves and other hard accessible sites shall require particularly diligent cleaning.
Caution: Device defect!

- The use of a cleaning agent with pH value of 7 - 9.5. Cleaners with pH above 11 may, depending on their cleaning agent, affect surfaces made of aluminium, aluminium alloys, plastic or composite materials, and shall be used only with consideration of data of material compatibility of used cleaner acc. to its data sheet. With pH values above 11, also stainless steel surfaces may be affected. For proper dilution, temperature, exposure time and water quality, follow the instructions of enzymatic cleaner or cleaning agent manufacturers in order to achieve an optimal cleaning effect. If there are no manufacturer's recommendations, regarding temperature and exposure duration, then follow the instructions of the medical bees GmbH (see 3.2). Instruments shall be cleaned in a freshly set up solution.
Caution: Device defect!

- The used cleaning agents come in contact with the following materials: Stainless steel, aluminium, plastic and rubber seals.

- The medical bees GmbH requires that new sterile cutting tools are used at every surgical procedure.

3.1.1 Extraordinary transmissible pathogens

In case of patients with the Creutzfeldt-Jakob disease (CJD), who - because of associated infection hazards - are regarded to be risk patients - the procedures should always be undertaken with the use of disposable instruments.
Dispose of instruments used or suspected of use on a patient with CJD (Creutzfeldt-Jakob disease) after surgery and/or follow current national recommendations.

⚠ **Attention:**
The instruction, specified herein for the clinical processing, has been proven by the medical bees GmbH Company. It meets the requirements of ISO 17664:2004 international standard, as well as of ANSI/AAMI ST81:2004 and shall be intended for processing of non-sterile medical devices of the medical bees GmbH Company.

Additional information is available from national laws and directives. Also respected shall be the internal guidelines and procedural instructions of a hospital, as well as the recommendations and instructions of the manufacturers of cleaning and disinfection agents and of the systems for clinical processing.

The supplier shall be obligated to accept responsibility for ensuring that the processing is carried out by properly trained personnel and with the use of appropriate, properly installed, maintained and checked systems and materials, in order to achieve the desired results. Any deviations from the above presented instructions shall be verified and assessed with regards to their possible, harmful impacts.

3.2 Preparation to cleaning

3.2.1 Dismantling

Ensure that all the mounted parts are dismantled, the bottom cap is opened and the power pack is removed from the machine / handpiece.
Caution: Device defect!

Power packs and chargers can be wiped with a cloth.

After every use, the power pack shall be placed in the charger.
Warning: Extension of surgical operation time!

⚠ **Attention:**
The power packs shall not be washed, rinsed, disinfected or sterilised.
Caution: Device defect!

Clinical processing of handpieces and attachments can be done by:

a) manual cleaning or

b) automatic cleaning cycle with manual pre-cleaning

(see the following chapters)

3.3 Manual cleaning

3.3.1 Machine / handpiece

1.) Remove residues

Rinse handpieces (machine housings, e.g. of drilling machines, oscillating saws) under running, cold tap water for, a least, 3 minutes. Coarse impurities and deposits shall be removed with a sponge, a lint-free cloths and/or a soft brush. All cannulations shall be cleaned with a specially designed cleaning brush (F-30-910-50). Triggers, release sleeves for attachments/chucks, mode selection switches and other moving parts move, at least, 5 times in their entire mobility range under running, cold water in order to lose and remove bigger deposits.

⚠ **Attention:**
Neither pointed nor sharp objects shall be used for cleaning.
Caution: Device defect!

2.) Spray with a cleaning agent

Spray all components with an enzymatic cleaner, a cleaning solution or a cleaning foam. Leave the agent on the components for, at least, 3 minutes and then wipe it down. For proper dilution, temperature, exposure time and water quality, follow the instructions of enzymatic cleaner or cleaning agent manufacturers in order to achieve an optimal cleaning effect.

3.) Rinse with tap water

Rinse under running, cold tap water for, a least, 2 minutes. Use a syringe, pipette or water pistol to flush cannulas and other difficult to access areas.

4.) Clean with a cleaning solution

Clean with an enzymatic cleaner or a cleaning agent under running water for, at least, 5 minutes. In addition, move all the moving parts at least 5 times in their entire mobility range. Remove visible soiling and deposits with the aid of a soft brush and/or a lint-free cloth.

For proper dilution, temperature, exposure time and water quality, follow the instructions of enzymatic cleaner or cleaning agent manufacturers in order to achieve an optimal cleaning effect.

5.) Rinse with tap water

Rinse the components thoroughly under cold to lukewarm, running water for, at least, 2 minutes. Use a syringe, pipette or water pistol to flush lumens and channels. Move the joints, handles and other moving parts at least 5 times in their entire mobility range in order to flush the mobility ranges thoroughly under running water.

6.) Check the components visually

Check all the cannulas, coupling sleeves, etc. for visible contamination/soiling. Repeat steps 1 through 6 till all the components are free from any visual contamination.

7.) Final rinsing with demineralised/purified water

Finally rinse the components for a minimum of 2 minutes with desalted (demineralised/purified) water.

8.) Drying

Handpieces and components shall be dried with a soft lint-free cloth or in cleaned compressed air.

3.3.2 Attachments

1.) Remove residues

Place the attachments (e.g. drill chucks / quick-action chucks) in cold tap water for 5 minutes.

In addition, move all the moving parts at least 5 times in their entire mobility range under running water in order to loose and remove bigger deposits.

Remove coarse impurities and deposits with a sponge, a lint-free cloths and/or a soft brush till no contaminations are visible. All cannulations shall be cleaned with a specially designed cleaning brush (F-30-910-50).

⚠ **Attention:**
Neither pointed nor sharp objects shall be used for cleaning.
Caution: Device defect!

2.) Cleaning in ultrasonic bath

Handle the attachments for 5 minutes in ultrasonic bath (0.5% cleaning solution of Neodisher MediClean (Dr. Weigert, Hamburg), 40°C).

3.) Cleaning with a water pistol

Flush all the gaps, joints and cavities with a water pistol for a minimum of 20 sec.

4.) Clean with a cleaning solution

Clean with an enzymatic cleaner or a cleaning agent under running water for, at least, 5 minutes. In addition, move all the moving parts at least 5 times in their entire mobility range. Remove visible soiling and deposits with the aid of a soft brush and/or a lint-free cloth.

For proper dilution, temperature, exposure time and water quality, follow the instructions of enzymatic cleaner or cleaning agent manufacturers in order to achieve an optimal cleaning effect.

5.) Rinse with tap water

Rinse the components thoroughly under cold to lukewarm, running water for, at least, 2 minutes. Use a syringe, pipette or water pistol to flush lumens and channels. Move the joints, handles and other moving parts at least 5 times in their entire mobility range in order to flush the mobility ranges thoroughly under running water.

6.) Check the components visually

Check all the cannulas, coupling sleeves, etc. for visible contamination/soiling. Repeat steps 1 through 6 till all the components are free from any visual contamination.

7.) Final rinsing with demineralised/purified water

Finally rinse the components for a minimum of 2 minutes with desalted (demineralised/purified) water.

8.) Drying

Handpieces and components shall be dried with a soft lint-free cloth or in cleaned compressed air.

3.4 Mechanical cleaning after manual pre-cleaning

⚠ **Attention:**
- The manual cleaning before the mechanic/automatic cleaning/disinfection is important because it ensures that cannulations and other hard accessible areas are clean.
Warning: Danger for the patient!
Caution: Device defect!

- No cleaning / disinfection procedure, alternative to the procedures, which are described below (including manual pre-cleaning) has been validated by the medical Bess GmbH Company.
Warning: Danger for the patient and for the user!
Caution: Device defect!

3.4.1 Manual pre-cleaning of the machine/handpiece

1.) Remove residues

Rinse handpieces (machine housings, e.g. of drilling machines, oscillating saws) under running, cold tap water for, a least, 2 minutes. Coarse impurities and deposits shall be removed with a sponge, a lint-free cloths and/or a soft brush. All cannulations shall be cleaned with a specially designed cleaning brush (F-30-910-50). Triggers, release sleeves for attachments/chucks, mode-selection switches and other moving parts shall be moved at least 5 times in their entire mobility range under running cold water in order to loose and remove bigger deposits.

⚠ **Attention:**
Neither pointed nor sharp objects shall be used for cleaning.
Caution: Device defect!

2.) Spray with a cleaning agent

Spray all components with an enzymatic cleaner, a cleaning solution or a cleaning foam (0.5% Neodischer Mediclean). Leave the agent on the components for, at least, 2 minutes and then wipe it down.

For proper dilution, temperature, exposure time and water quality, follow the instructions of enzymatic cleaner or cleaning agent manufacturers in order to achieve an optimal cleaning effect.

3.) Clean with a cleaning solution

Clean with an enzymatic cleaner or a cleaning agent (0,5%Neodischer Mediclean) under running water for, at least, 5 minutes. Move the moving parts at least 5 times in their entire mobility range under running cold water. Remove visible soiling and deposits with the aid of a soft brush and/or a lint-free cloth.

For proper dilution, temperature, exposure time and water quality, follow the instructions of enzymatic cleaner or cleaning agent manufacturers in order to achieve an optimal cleaning effect.

4.) Rinse with tap water

Rinse the components thoroughly under cold to lukewarm, running water for, at least, 2 minutes. Use a syringe, pipette or water pistol to flush lumens and channels. Move the joints, handles and other moving parts at least 5 times in their entire mobility range in order to flush the mobility ranges thoroughly under running water.

5.) Check the components visually

Repeat steps 1 through 5 till all the components are free from any visual contamination.

Subsequently to the above described manual cleaning, mechanic / automatic cleaning shall follow. Further see item 3.4.3 Mechanical cleaning

3.4.2 Manual pre-cleaning of the attachments / chucks

1.) Remove residues

Place the attachments (e.g. drill chucks / quick-action chucks) in cold tap water for 5 minutes.

In addition, move all the moving parts at least 5 times in their entire mobility range under running water in order to loose and remove bigger deposits.

Remove coarse impurities and deposits with a sponge, a lint-free cloths and/or a soft brush till no contaminations are visible. All cannulations shall be cleaned with a specially designed cleaning brush (F-30-910-50).

⚠ **Attention:**
Neither pointed nor sharp objects shall be used for cleaning.
Caution: Device defect!

2.) Cleaning in ultrasonic bath

Handle the attachments for 5 minutes in ultrasonic bath (0.5% cleaning solution of Neodisher MediClean (DrHamburg), 40°C).

3.) Cleaning with a water pistol

Flush all the gaps, joints and cavities with a water pistol for a minimum of 20 minutes.

4.) Check the components visually

Repeat steps 1 through 4 till all the components are free from any visual contamination.

Subsequently to the above described manual cleaning, mechanic / automatic cleaning shall follow. Further see item 3.4.3 Mechanical cleaning

3.4.3 Mechanical cleaning

1.) Load a washing machine basket

Place all the articles in a screen basket, specially designed by the medical bees for the system (e.g. F-30-910-13, F-30-910-18). Ensure that all the cannulations (attachments) are placed vertically, i.e. in their upright position. Place the rinsing adapter (F-30-910-3X) above the handpieces Connect the rinsing adapter, located above the washing machine basket, to the medium supply system (internal rinsing of handpieces).

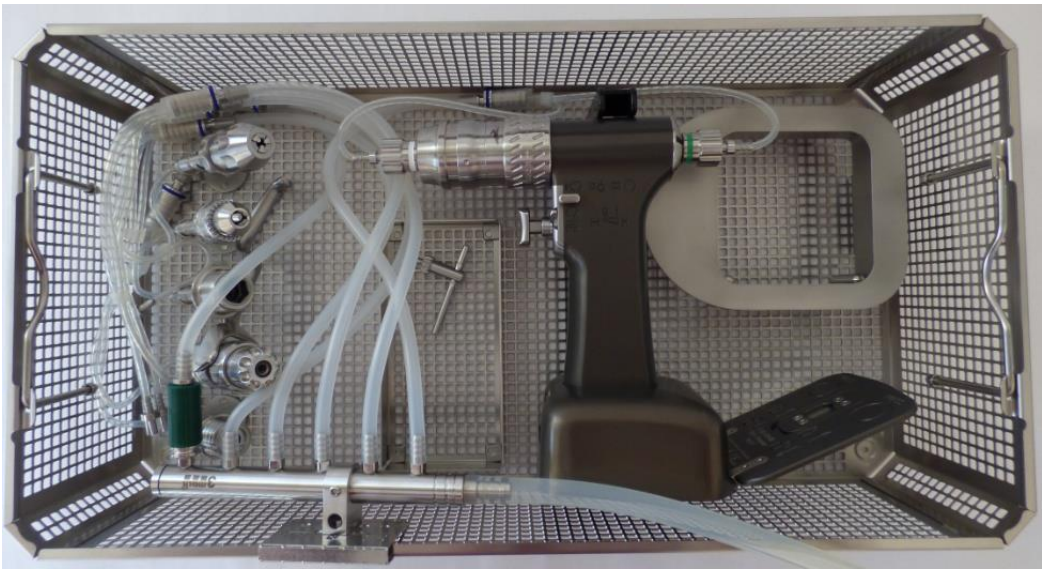

Machines with associated rinsing adapters

F-31-100-00 drilling / reaming machine with:
- Universal rinsing adapter (F-30-910-30)
- Rinsing adapter for drilling machine (F-30-910-31)

Drilling machine (F-31-150-00) and Oscillating reaming machine (F-31-700-00) with:
- Universal rinsing adapter (F-30-910-30)
- Rinsing adapter for drilling machine (F-30-910-31)

Oscillating saws (F-31-300-00; F-31-301-00) with:
- Universal rinsing adapter (F-30-910-30)

Reciprocating/ Sternum saw (F-31-601-00) with:
- Universal rinsing adapter (F-30-910-30)
- Rinsing adapter for reciprocating - sternum saws (F-30-910-33)

Cleaning programme

Remark: The cleaning / disinfection device shall meet the requirements of ISO 15883 international standard.

Cleaning agent: neodischer MediClean (Dr. Weigert, Hamburg)

- 2-minute pre-cleaning with cold potable water
- Empty
- 5-minute cleaning with a 0.5% cleaning solution at 55°C
- Empty
- 2-minute neutralisation (Neodisher® Z)
- Empty
- 3-minute rinsing with cold, completely desalinated water
- Empty
- 2-minute final rinsing with cold, completely desalinated water
- Empty
- 5-minute thermal disinfection with hot completely desalinated water (≥93°C)
- 40-minute drying (≥90°C)

2.) Checking of components

Remove all components from the wash machine basket. Check all the cannulas, coupling sleeves, etc. for visible contamination/soiling.
If necessary, repeat the automatic cleaning cycle with manual pre-cleaning.

Devices / handpieces, especially seals and bearings, are particularly affected by mechanic cleaning/disinfection. Especially, check carefully the circumferential gasket in the lid after cleaning for any damages.

The components shall properly be oiled and regularly maintained.
The medical bees GmbH Company requires that maintenance is carried out at least once a year.

3.5 Oiling / maintenance

Regular oiling of the devices/handpieces and of the attachments shall guarantee their long service life and trouble-free operation. All the approachable moving parts of the devices/handpieces, the lid and the attachments, shall be oiled with a spray oil (F-30-900-60) or a sterilisable paraffin oil (F-30-900-61). Wipe excessive oil with a cloth.
Caution: Device defect!

The medical bees GmbH Company recommends to use a lubrication stand (F-30-900-10) for oiling of devices / handpieces.

3.6 Packaging

Cleaned and dries products shall be placed into a screen basket in intended positions. The screen basket shall additionally be wrapped in a sterile barrier material, acc. to ISO 11607 standard, e.g. in an appropriate sterilisation wrap or in a multi-use sterilisation container.

Protect pointed or sharp instruments from damage by mutual contact.
Caution: Device defect!

Then, take care that sharp or pointed objects do not damage the sterile barrier material.
Warning: Danger for the patient!

3.7 Sterilisation

⚠ **Attention:**

Remove the power pack from the device / handpiece Do not ever sterilise the power pack, as the sterilisation process can damage it.
Warning: Danger for the user!
Caution: Device defect!

The systems may be resterilised in a validated steam sterilisation process (acc. to ISO 17665 or national standards). The medical bees GmbH Company recommends the following parameters for instruments and the screen basket, packed in the sterile barrier material:

Sterilisation procedure (cycle)	Sterilisation duration	Sterilisation temperature	Drying time
Steam sterilisation (fractionated pre-vacuum) (at least 3 intervals)	(at least 4 minutes)	at least 132°C maximum 138°C	20 - 60 minutes
	at least 5 minutes	at least 134°C maximum 138°C	20 - 60 minutes

The drying times vary between 20 and 60 minutes, depending on various packaging materials (sterile barrier systems consisting of a sterilisation wrap or a multi-use sterilisation container), steam quality, the materials of the products to be sterilised, the total weight, the performance characteristics of the steriliser and various cooling times.

Attention:
- The following maximum values shall not be exceeded: 143°C above maximum 22 minutes.
- Do not accelerate the cooling process.
- Sterilisation in hot air, ethylene oxide, radiation, plasma and formaldehyde shall not be applied.

Caution: Device defect!

3.8 Repairs and Technical Service

In case of any defect or malfunction of the device, qualifying it to repair, send it to the medical bees GmbH Company or to any authorised service station.
Caution: Device defect!

A dropped device shall be sent for inspection and repair.
Caution: Device defect!

No defective device shall further be used
Warning: Danger for the patient and for the user!

If repair is neither possible nor justified, put the device to disposal. See the instructions in the chapter Disposal.

Except the above-mentioned care and maintenance measures, no maintenance works may be undertaken, either by the user or any third person.
Warning: Danger for the patient and for the user!
Caution: Device defect!

The Medical bees Company requires that the device and its accessories, as well as the attachments / chucks are regularly (at least once a year) maintained by the manufacturer's or authorised service station.

No battery cells may be replaced. In case of any defect of the power pack, send it to the Medical bees GmbH Company or to any authorised service station.
Warning: Danger for the patient and for the user!
Caution: Device defect!

⚠ **Attention:** „SV 661 in ADR 2019" shall apply for transport of damaged lithium batteries.
By the term "damaged lithium batteries" one shall understand, in particular:

- Batteries with a defect which is hazardous for safety,
- Batteries with damaged or seriously deformed enclosures,
- leaking batteries or batteries with gas leakage or
- Batteries with defects which cannot be identified before transport to the place of analysis.

If the batteries are only inoperative, then no special conditions shall apply.
Warning: Danger for the user!

⚠ **Attention:**
The Manufacturer shall assume no responsibility for damages, which may arise from improper operation of the system or from its maintenance provided by unauthorised service stations
Warning: Danger for the patient and for the user!
Caution: Device defect!

4 Troubleshooting

4.1 Device/handpiece and lid

Problem	Possible cause	Remedy/corrective action
The machine does not run	No power pack is inserted into the handpiece	Insert a charged power pack
	The power pack is discharged	Charge the power pack
	The safety system is activated (the slider is in the safety position)	Move the slider to the right or to the left or to the “Turned-On” position
	The power pack is defective	Send the machine to the medical bees Service Station
	The overheating protection is activated, the white light is already blinking	Let the machine cool down
The machine demonstrates too little power	The power pack is discharged; the red light is already lit on the power pack	Charge the power pack
	The machine is operated in wrong mode (e.g. REAM mode instead DRILL mode)	Change the mode (DRILL/REAM)
	The machine and/or the attachments are poorly serviced	Send the machine to the medical bees Service Station
The machine suddenly stops	The power pack is discharged; the red light is lit on the power pack	Charge the power pack
	Overheating of the machine, the white light is already blinking The red light is lit on the power pack	Let the machine cool down
	The machine or the power pack is defective	Insert a fully charged power pack into the machine. Send the machine to the medical bees Service Station

Problem	Possible cause	Remedy/corrective action
The machine is running further upon release of the trigger	The trigger is blocked by deposits (e.g. blood)	Operate the trigger several times, clean and maintain the machine acc. to instructions
	The power pack is defective	Remove the power pack and keep running till it stops Then send the machine to the medical bees Service Station
The machine is noticeably warm/hot	The machine was heavily used	Let the machine cool down
The machine runs too slowly	Wrong mode is set (e.g. REAM instead of DRILL)	Set correct mode (DRILL/REAM) for drilling and reaming chuck
The machine is sawing too slowly	Wrong frequency / CPM for sawing is set (e.g. Step I instead of Step II)	Set proper frequency / CPM for sawing (Step II)
The machine runs too quickly	Wrong mode is set (e.g. DRILL instead of REAM)	Set correct mode (DRILL/REAM) for drilling and reaming chuck
The machine is sawing too quickly	Wrong frequency / CPM for sawing is set (e.g. Step II instead of Step II)	Set proper frequency / CPM for sawing (Step I)
The oscillating saw vibrates too much	The saw blade locking mechanism is not tightened or is loose.	Tighten the lock button on the saw blade quick coupling
Chucks cannot be mounted on the machine.	The machine coupling is jammed by deposits	Remove deposits by thorough cleaning and, additionally, oil the coupling mechanism elements.
	Defect of the locking mechanism	Distribute some oil and move the mechanical parts. When it does not help, send the machine to the medical bees Service Station
Attachments cannot be dismounted from the machine.	The unlocking sleeve for the attachments is jammed / clogged with debris/	Control the unlocking sleeve, possibly clean and oil.
	Defect of the locking mechanism	Send the machine to the medical bees Service Station

Problem	Possible cause	Remedy/corrective action
The trigger is difficult to move	The trigger is blocked by deposits	Clean and oil the trigger
	Defects of the mechanic part	Send the machine to the medical bees Service Station

4.2 Power pack

Problem	Possible cause	Remedy/corrective action
It is not possible to insert the power pack into the handpiece	The power pack was inserted in wrong orientation	Turn the power pack by 180° and insert again Watch out for the shape of the power pack and the handpiece
	The power pack is out of shape, possibly by impact.	Send the power pack to the medical bees Service Station, adhere to item 3.9 Repairs and technical service.
The power pack cannot be removed from the handpiece	The power pack seats firmly because of the rubber pad	Pull the power pack out a bit stronger, so that it can loosen and come out.
	The power pack is blocked in the handpiece	Send the machine to the Medical bees Service Station
A fully charged power pack is not functional	The safety system is activated (the slider is in the safety position)	Move the slider to the right or to the left or to the “Turned-On” position
	The power pack is defective; it could fall down after removal from the charger or was in contact with fluid.	Send the power pack to the medical bees Service Station, adhere to item 3.9 Repairs and technical service.
The charger status light is continuously on	The power pack is in the charger	No defect. The charging status light is continuously on in a switched on charger.
	The fully charged power pack was removed from the charger and not yet used in the handpiece	No defect After removal of a fully charged power pack from the charger, the charging status green lights are on for 2 hours.

Problem	Possible cause	Remedy/corrective action
The charger status indicator is not lit. Power pack is flashing yellow	The power cable is not plugged in	Connect the charger by means of the delivered power cable with the supply mains.
The power pack could incidentally be washed, immersed in fluid or sterilised and is thus defective.	Carelessness or negligence of the personnel	Send the power pack to the medical bees Service Station, adhere to item 3.9 Repairs and technical service.
The charger status indicator is not lit. The power pack is inserted into the charging unit	The power cable of the charger is not plugged in	Connect the charger by means of the delivered power cable with the supply mains.
	The charger is defective	Have the charger checked by the Service Station of the medical bees and, if appropriate, repaired.
	The power pack is defective	Send the power pack to the medical bees Service Station, adhere to item 3.9 Repairs and technical service.
The housing of the power pack demonstrates visual defects	The power pack was exposed to too high heat	Send the power pack to the medical bees Service Station, adhere to item 3.8 Repairs and technical service.
	The power pack was dropped.	Send the power pack to the medical bees Service Station, adhere to item 3.9 Repairs and technical service.
The power pack is not efficient enough	The power pack was stored out of the charger and not used longer than for 1 month	Three-five charging/discharging cycles shall be necessary for the power pack to reach its maximum capacity again.
The power pack glows red continuously in the charger, although the charger is lit green. When the power pack is inserted into a machine and started, then its green light will be on again.	The balancing of cells in the power pack is not functional	The machine is fully functional and the problem must have been solved again after 3-5 charge/discharge cycles. The cells were regenerated.
The power pack flashes red in the charger, although the charger is lit green.	The power pack is defective	Send the power pack to the medical bees Service Station, adhere to item 3.9 Repairs and technical service.

4.3 Attachments/chucks and tools

Problem	Possible cause	Remedy/corrective action
Chucks cannot be mounted on the machine.	The chuck coupling is jammed by deposits	Remove deposits by thorough cleaning and, additionally, oil the coupling mechanism elements.
Chucks cannot be dismounted from the machine.	The unlocking sleeve for the chucks is jammed / clogged with debris/	Control the unlocking sleeve, possibly clean and oil. Send the machine to the medical bees Service Station
A cutting tool cannot be mounted in a chuck or is mounted with some force	The locking mechanism is jammed by deposits	Remove deposits by thorough cleaning and, additionally, oil the coupling mechanism elements.
	The chuck or the tool is out of shape in result of incorrect use (e.g. dropping) or wear	Send the machine to the Medical bees Service Station
The chuck is noticeably warm / hot	The chuck was heavily used	Let the chuck cool down and oil before the next use
The rotating chuck rotates too slowly	Wrong mode is set (e.g. REAM instead of DRILL)	Set correct mode (DRILL/REAM) for drilling and reaming chuck
The rotating chuck rotates too quickly	Wrong mode is set (e.g. DRILL instead of REAM)	Set correct mode (DRILL/REAM) for drilling and reaming chuck
The Kirschner wire cannot be inserted into the wire chuck	The Kirschner wire chuck is not opened	Set the adjusting sleeve on the chuck tip to the right wire dimension.
The Kirschner wire cannot be gripped despite tension lever activation	The Kirschner wire chuck is opened too much.	Set the adjusting sleeve on the chuck tip to the right wire dimension.
The Kirschner wire is stuck in the chuck and is not moving any farther	The Kirschner wire was obliquely inserted and has tilted / twisted in the chuck	Send the Kirschner wire chuck to the medical bees Service Station
Both bone and the tool heat up during procedure	The cutting tool is blunt	Replace the tool

4.4 Charging unit

Problem	Possible cause	Remedy/corrective action
No light indication on the charger	The power cable is not plugged in.	Connect the charger by means of the delivered power cable with the supply mains.
	The charger is defective	Have the charger checked by the manufacturer and, if appropriate, repaired.
There is no light indication on the power pack with the power cable plugged in.	The power cable is not plugged in.	Connect the charger by means of the delivered power cable with the supply mains.
	The charger is defective	Have the charger checked by the manufacturer and, if appropriate, repaired.
	The charger is defective	Have the charger checked by the manufacturer and, if appropriate, repaired.
The power pack indicates red light	The charger temperature is too high	Leave the power pack in the charging slot; when the charger cools down, the charging process will automatically start.
	Deeply discharged power pack	Completely discharged battery was not recharged immediately after use and has not been used for several weeks. More charging/discharging [...] cycles shall be necessary for battery to reach maximum capacity again.
Power pack is flashing yellow	The power cable is not plugged in	Connect the charger by means of the delivered power cable with the supply mains.

Remark: If the above steps fail to remedy the problem, please contact your local Medical bees Service Station.

5 Technical data

5.1 Operating cycle

Device	Switch-on time	Switch-off time	Cycles
F-31-100-00 drilling machine switchable	60 seconds	60 seconds	5
F-31-150-00 drilling machine	60 seconds	60 seconds	5
F-31-300-00; F-31-301-00 oscillating saw, Synthes AO	60 seconds	60 seconds	5
F-31-310-00; F-31-311-00 oscillating saw Stryker	60 seconds	60 seconds	5
F-40-100-00; F-40-101-00 oscillating straight saw, Stryker	60 seconds	60 seconds	5
F-40-110-00; F-40-111-00 oscillating straight saw, Synthes	60 seconds	60 seconds	5
F-31-601-00 sternum saw/ reciprocating saw with a keyless chuck	60 seconds	60 seconds	5
F-31-700-00 oscillating reaming machine	60 seconds	60 seconds	5

When reciprocating or sternum saw is used, the operator shall not work longer than 30 minutes per day.
Warning: Danger for the user!

The recommended application durations of the devices have been calculated at their average load and for ambient temperature of +20°C.

The machines get heated under continuous load.

After the above-mentioned active period, both the handpiece and the used accessories shall be allowed to cool down, at least for turn-off time duration. After five cycles, both the handpiece and the accessories shall be allowed to cool down for at least 30 minutes. Compliance with these regulations prevents overheating of the system. In this way, patient's or user's injuries can be excluded. The user shall be responsible for the application and adherence to cooling phases. For longer constant load periods, we recommend to have an additional device, as well as additional attachments at hand.
Warning: Danger for the patient and for the user!
Caution: Device defect!

⚠ **Attention:**
- Always adhere to recommended operation cycles.
Caution: Device defect!

- Only new cutting tools shall be used in order to avoid overheating of the system from reduced cutting performance.
Caution: Device defect!

- In order to avoid heat necrosis, always flush the cutting tools with cooling fluid. Manual flushing
Warning: Danger for the patient!

- Careful care and maintenance of the system reduces heat up development in the handpiece and in attachments.
Caution: Device defect!

5.2 Device specification

F-31-100-00 drilling / reaming machine	
Handpiece dimensions (without attachment)	166 x 111 x 207 mm
Mass of handpiece with power pack	1850 g
Continuously adjustable rotation speed	0 - 1000 rpm (drill mode) 0 - 250 rpm (ream mode)
Cannulation	Cannulation of Ø 4.3mm
Protection class	B, EN 60601-1
Power supply	Internal battery

F-31-150-00 rigid drilling machine	
Handpiece dimensions (without attachment)	140 x 111 x 206 mm
Mass of handpiece with power pack	1660 g
Continuously adjustable rotation speed	0 - 1000 rpm
Cannulation	Cannulation of Ø 4.3mm
Protection class	B, EN 60601-1
Power supply	Internal battery

Oscillating saw Synthes AO (F-31-300-00; F-31-301-00)	
Handpiece dimensions (without attachment)	166 x 111 x 211 mm
Mass of handpiece with power pack	1760 g
Continuously adjustable rotation speed	0 - 9000 cpm (Step I) 0 - 10000 cpm (Step II)
Protection class	B, EN 60601-1
Power supply	Internal battery

Oscillating saw Stryker (F-31-310-00; F-31-311-00)	
Handpiece dimensions (without attachment)	166 x 111 x 211 mm
Mass of handpiece with power pack	1760 g
Continuously adjustable rotation speed	0 - 9000 cpm (Step I) 0 - 10000 cpm (Step II)
Protection class	B, EN 60601-1
Power supply	Internal battery

Oscillating straight saw Stryker (F-40-100-00; F-40-101-00)	
Handpiece dimensions (without attachment)	106 x 111 x 325 mm
Mass of handpiece with power pack	1780 g
Continuously adjustable rotation speed	0 - 9000 cpm (Step I) 0 - 10000 cpm (Step II)
Protection class	B, EN 60601-1
Power supply	Internal battery

Oscillating straight saw Synthes (F-40-110-00; F-40-111-00)	
Handpiece dimensions (without attachment)	106 x 111 x 325 mm
Mass of handpiece with power pack	1780 g
Continuously adjustable rotation speed	0 - 9000 cpm (Step I) 0 - 10000 cpm (Step II)
Protection class	B, EN 60601-1
Power supply	Internal battery

F-30-601-00 sternum saw with a keyless chuck	
Handpiece dimensions (without attachment)	185 x 111 x 206 mm
Mass of handpiece with power pack	1750 g
Continuously adjustable rotation speed	0 - 7500 cpm (Step I) 0 - 10000 cpm (Step II)
Protection class	B, EN 60601-1
Power supply	Internal battery

F-31-700-00 oscillating reaming machine	
Handpiece dimensions (without attachment)	140 x 111 x 206 mm
Mass of handpiece with power pack	1550 g
Continuously adjustable rotation speed	0 - 9000 rpm (Step I) 0 - 10000 rpm (Step II)
Protection class	B, EN 60601-1
Power supply	Internal battery

F-30-900-00 Power pack (battery)	
Dimensions	89 x 87 x 102 mm
Mass	760 g
Type	Li-ion
Max. voltage	16.8 V
Operating voltage (rated voltage)	14.4 V
Capacity	2.1 Ah
Typical charging time period	< 90 min

F-30-900-50 charger (single)	
Dimensions	157 x 140 x 79 mm
Mass	1740 g
Type	Li-ion battery charger
Input	100-240 V AC 50-60 Hz 0.9 A
Output	16.8 V DC 2.0 A

F-30-900-51 charger (double)	
Dimensions	240 x 190 x 130 mm
Mass	4939 g
Type	Li-ion battery charger
Input	100-240 V AC 50-60 Hz 2x 0.9 A
Output	16.8 V DC 2.0 A

F-30-900-52 charger (quadruple)	
Dimensions	636 x 140 x 79 mm
Mass	6960 g
Type	Li-ion battery charger
Input	100-240 V AC 50-60 Hz 4x 0.9 A
Output	16.8 V DC 2.0 A

5.3 Environmental conditions

	Operation	Transport and storage
Temperature	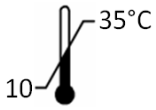	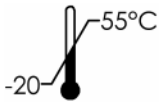
Relative air humidity	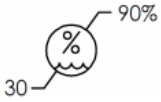	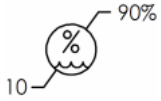
Air pressure	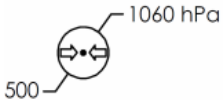	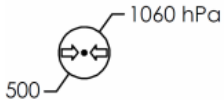

⚠ **Attention: The devices shall not be stored or operated in an explosive atmosphere.**

5.4 Applicable standards

The devices shall comply with the following standards and directives:

Medical directives: 93/42/EEC and 2007/47/EC

IEC 60601-1

5.5 Electromagnetic compliance

⚠ **Attention:**
In general, mutual disturbances of electric devices cannot be fully excluded. We strongly advise compliance with the following recommendations (distances) and observance of the instructions of other used electrical equipment.

In case of exposure to electromagnetic disturbances, unwanted speed fluctuations or even drop outs may occur on beesystem machines. Thus any operation may be conducted only conditionally.

Portable and mobile RF communications equipment (radio equipment) (including their accessories, like, for example, aerial cables or external aerials) shall be used no closer to the beesystem equipment than 30 cm (or 12 in.). Any non-observance of this recommendation may lead to reduced performance of the devices.

Accompanying documents acc. to IEC 60601-1-2, item 5.2.2

Table 1:

<table>
<tr><td colspan="3">Guidance and manufacturer's declaration - electromagnetic disturbance emissions</td></tr>
<tr><td colspan="3">The system is intended for use in the electromagnetic environment specified below. The customer of the user of the system shall ensure that the system shall be used in such environment.</td></tr>
<tr><td>Interference emissions-measurements</td><td>Compliance</td><td>Electromagnetic environment - guidelines</td></tr>
<tr><td>RF emissions of battery tools acc. to CISPR 14</td><td>In compliance</td><td rowspan="3">The system shall use RF energy exclusively for its internal functions. Therefore, its RF emissions are very small and improbable to affect operation of adjacent / closely located electronic equipment.</td></tr>
<tr><td>The charger shall radiate RF emissions
acc. to CISPR 11</td><td>Group 1
Class B</td></tr>
<tr><td>Conducted RF interference from the charger
acc. to CISPR 11</td><td>Class A</td></tr>
<tr><td>Emission of harmonic oscillations acc. to IEC 61000-3-2</td><td>Class A</td><td rowspan="2">The system shall be suitable for use in other establishments, including domestic establishments and those directly connected to the public low-voltage power supply network that supplies buildings used for domestic purposes.</td></tr>
<tr><td>Emissions of voltage fluctuations/ flicker emissions acc. to IEC 61000-3-3</td><td>In compliance</td></tr>
</table>

Table 2:

Guidance and manufacturer's declaration - electromagnetic immunity			
The system is intended for use in the electromagnetic environment specified below. The customer of the user of the system shall ensure that the system shall be used in such environment.			
Interference immunity-tests	**IEC 60601-testing level**	**Compliance level**	**Electromagnetic environment - guidelines**
Static electricity discharge (ESD) according to IEC 61000-4-2 standard	Contact discharge ± 8 kV Air discharge ± 15 kV	Contact discharge ± 8 kV Air discharge ± 15 kV	Floors shall be made of wood, concrete or ceramic tiles. If floors are covered with synthetic material, the relative humidity shall be at least 30 %.
Electrical fast transient disturbances /bursts acc. to IEC 61000-4-4	± 2 kV for network lines ± 1 kV for input and output lines	± 2 kV for network lines ± 1 kV for input and output lines	The quality of the supply voltage shall be to the standard of a typical business or hospital environment.
Surge voltages acc. to IEC 61000-4-5	Phase-to-phase voltage ± 1 kV	Phase-to-phase voltage ± 1 kV	The quality of the supply voltage shall be to the standard of a typical business or hospital environment.
Voltage dips, short interruptions and voltage variations on power supply input lines acc. to IEC 61000-4-11	< 5% U_T (> 95% dip of U_T) for 1/2 cycle 40% U_T (60% dip of U_T) for 5 cycles 70% U_T (30% dip of U_T) for 25 cycles < 5% U_T (> 95% dip of U_T) for 5 s	< 5% U_T (> 95% dip of U_T) for 1/2 cycle 40% U_T (60% dip of U_T) for 5 cycles 70% U_T (30% dip of U_T) for 25 cycles < 5% U_T (> 95% dip of U_T) for 5 s	The quality of the supply voltage shall be to the standard of a typical business or hospital environment. When the system user needs to continue the undertaken procedure also when energy supply is broken, it is advised to supply the system either from an interruption-free mains or from a battery.
Magnetic field with the supply voltage frequency of 50/60 Hz shall conform to IEC 61000-4-8 standard	30 A/m	30 A/m	The magnetic fields with the used mains frequency shall correspond to their standard values at typical business or hospital environment.
Remark: U_T is the a.c. mains voltage prior to application of the test level			

Table 3:

Guidance and manufacturer's declaration - electromagnetic immunity			
The system is intended for use in the electromagnetic environment specified below. The customer of the user of the system shall ensure that the system shall be used in such environment.			
Interference immunity-tests	**IEC 60601-testing level**	**Compliance level**	**Electromagnetic environment - guidelines**
Conducted RF disturbances acc. to IEC 61000-4-6 Radiated RF disturbances acc. to IEC 61000-4-3	3 V Effective value 150 kHz to 80 MHz ISM-frequencies 6 V 3 V/m 80 MHz to 2.7 GHz	3 V Effective value 150 kHz to 80 MHz ISM-frequencies 6 V 3 V/m 80 MHz to 2.7 GHz	Portable and mobile communication devices shall not be used in closer proximity of the system or its cables than the recommended safety distance, calculated from the equation applicable to the frequency of the transmitter. **Recommended safety distance:** $d = 1.2\sqrt{P}$ $d = 1.2\sqrt{P}$ for 80 MHz to 800 GHz $d = 2.3\sqrt{P}$ for 800 MHz to 2.5 GHz whereby P is the nominal power output of the transmitters in Watts (W), according to the transmitter manufacturer and d is the recommended safety distance in meters (m). Field strengths from fixed RF transmitters, as determined by an electromagnetic site survey a, should be less than the compliance level in each frequency range b. Interference may occur in the vicinity of equipment marked with the following symbol.
Remark 1	The higher frequency range applies at 80 MHz and 800 MHz		
Remark 2	These guidelines may not be applicable in all cases. The propagation of electromagnetic waves is influenced by their absorption and reflection by buildings, objects and persons.		

[a] Field strengths from fixed transmitters, such as base stations for wireless (cellular/cordless) telephones and land mobile radios, amateur radio, AM and FM radio broadcast cannot, theoretically, be accurately predetermined. In order to assess the electromagnetic environment, due to fixed RF transmitters, an electromagnetic site survey shall be carried out. If the measured field strength in the location in which the system is used exceeds the above-mentioned level, then the system shall be monitored to verify normal operation If abnormal performance is observed, additional measures may be necessary, such as, for example, re-orienting or relocating of the system.

[b] Above the frequency range from 150 kHz to 80 MHz, the field strength shall be lower than 3 V/m.

Table 4:

Recommended safety distances between portable and mobile RF telecommunications equipment and the system			
The system is intended for use in the electromagnetic environment in which RF disturbances shall be controlled. The customer or user of the system can thus help avoid electromagnetic interference by maintaining the minimum safe distance between portable and mobile RF telecommunication devices (transmitters) and the system - depending on the maximum output power of the communications equipment, as specified below.			
Rated power of the transmitter W	**Safety distance, depending on transmitter frequency**		
	150 kHz to 80 MHz $d = 1.2\sqrt{P}$	**80 MHz to 800 GHz** $d = 1.2\sqrt{P}$	**800 MHz to 2.5 GHz** $d = 2.3\sqrt{P}$
0.01	12 cm	12 cm	23 cm
0.1	38 cm	38 cm	73 cm
1	1.2 m	1.2 m	2.3 m
10	3.8 m	3.8 m	7.3 m
100	12 m	12 m	23 m
For transmitters whose nominal power output is not covered by the above table, the recommended working clearance *d* in meters (m) can be determined, using the equation in the corresponding column, where P is the maximum nominal output of the transmitter in watts (W) specified by the transmitter manufacturer.			
Remark 1	The higher frequency range applies at 80 MHz and 800 MHz		
Remark 2	These guidelines may not be applicable in all cases. The propagation of electromagnetic waves is influenced by their absorption and reflection by buildings, objects and persons.		

6 REF Order information

The below listed products are an integral part of the User's Manual. Every product delivery corresponds to an appropriate user's manual.

6.1 Handpieces

REF Item number	Item name
F-31-100-00	Drilling/reaming device
F-31-150-00	Standard drilling machine
F-31-300-00	4° oscillating saw, Synthes AO
F-31-301-00	2° oscillating saw, Synthes AO
F-31-310-00	Oscillating saw Stryker 4°
F-31-311-00	Oscillating saw Stryker 2°
F-40-100-00	Oscillating straight saw Stryker 4°
F-40-101-00	Oscillating straight saw Stryker 2°
F-40-110-00	Oscillating straight saw Synthes 4°
F-40-111-00	Oscillating straight saw Synthes 2°
F-31-601-00	Sternum saw with a keyless attachment/chuck
F-31-700-00	Oscillating reaming machine

6.2 Power Pack (battery, motor, electric)

REF Item number	Item name
F-30-900-00	Powerpack
F-30-900-50	Charging unit (1 charging slot)
F-30-900-51	Charging unit (2 charging slots)
F-30-900-52	Charging unit (4 charging slots)
F-30-900-53	Country-specific plug for charging units (EU)
F-30-900-54	Country-specific plug for charging units (UK)
F-30-900-55	Country-specific plug for charging units (US)
F-30-900-56	Country-specific plug for charging units (AU)
F-30-900-57	POAG cable for charging units

6.3 Attachments

REF Item number	Item name	REF Item number	Item name
F-30-100-10	Wire/ pin driver (K-wire) 1-4 mm for F-31-100-00	**F-30-100-60**	Jacobs drill chuck, small
F-30-100-15	Wire/ pin driver (K-wire) 1-4 mm for F-30-150-00	**F-30-100-61**	Jacobs drill chuck, large
F-30-100-19	Extension for Kirschner wire chuck	**F-30-100-62**	Roehm drill chuck
F-30-100-25	Adaptor for drill guide, radiolucent	**F-30-100-63**	Quick-action chuck with lock
F-30-100-50	AO chuck, small	**F-30-100-64**	Quick-action chuck without lock
F-30-100-51	AO chuck, large	**F-30-100-65**	Albrecht quick action chuck
F-30-100-52	¼“ attachment	**F-30-100-66**	Large drill chuck
F-30-100-53	Hudson chuck	**F-30-400-01**	Top for sternum
F-30-100-54	Harris chuck	**F-30-400-05**	Keyless top for sternum
F-30-100-55	Hexagonal chuck, SW6	**F-30-400-10**	XL Keyless top for sternum
F-30-100-56	DIN-clutch		
F-30-100-57	Hall-Zimmer attachment		

6.4 Cleaning and care of the bee-system

REF Item number	Item name	REF Item number	Item name
F-30-900-10	Lubrication stand	**F-30-910-30**	Universal rinsing adapter (for all machines)
F-30-900-20	Sterile funnel	**F-30-910-31**	Spray adapter for a drilling machine (for F-31-100-00 / F-30-150-00)
F-30-900-60	Oil Spray	**F-30-910-33**	Spray adapter for reciprocating- sternum saws (for F-30-400-00 / F-30-600-00 / F-30-601-00)
F-30-900-61	Hi Tech OilPen	**F-30-910-40**	Rinsing set
F-30-900-70	Universal spray adapter (for all machines)	**F-30-910-42**	beesystem chuck: Miele / Stielco / Webeco
F-30-900-72	Spray adapter for drilling machine (for F-31-100-00 / F-30-150-00)	**F-30-910-43**	beesystem adapter Belomed
F-30-900-74	Spray adapter for saws (for F-30-400-00 / F-30-600-00 / F-30-601-00)	**F-30-910-44**	beesystem adapter Maquet / MediKomp / Getinger

REF Item number	Item name	REF Item number	Item name
F-30-900-78	Spray adapter for drilling machine (for F-30-100-00 / F-30-150-00)	**F-30-910-50**	Cleaning brushes - set
F-30-910-05	Lid for cleaning and sterilisation containers with a lock	**F-31-910-13**	Cleaning and sterilisation tray with a lid for one machine and accessories
		F-31-910-18	Cleaning and sterilisation tray with a lid for two machines and accessories

7 Used symbols

The following symbols are applied on the device or on particular components:

	Attention: Read the delivered User's Manual before device operation.
	Manufacturer
	Date of manufacturing
	Batch designation
	Order number
	Series number
	Temperature limit
	Read the delivered User's Manual before device operation.
	Non-sterile
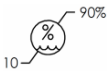	Air humidity, limit
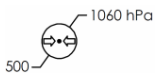	Air pressure, limit

CE 0483	Conformable with 93/42 EC directive
	Keep / store dry
	The device is classified as type B, regarding protection against electric shock and electric leakage currents. The device is suitable for use on patients in conformity with IEC 60601-1 standard.
	The device contains batteries (Li-Ion = chem. Symbol of harmful substance Batteries shall properly be disposed, taking into account environment protection. Battery disposal shall comply with national laws or with the European battery directive: 2006/66/EC. **Attention:** Fire, explosion and burn hazard. The battery cells (batteries) shall not be segmented or taken apart, shorted or crushed, or heated over +60°C or burned.
cMETus	With regard to electric shock, fire and mechanical risks only in compliance with UL-60601-1
CE 0483	The device complies with the requirements of the European Standard 93/42/EEC for medical devices. It has been certified by an independent Notified Body with identification number 0483. Therefore, it carries the CE mark.
	The slider in the middle position → INTERLOCK / SAFETY POSITION The device cannot be unintentionally started
	The slide retracted → CW rotation
	The slide extended → CCW rotation
	The oscillating mode is off
	The oscillating mode is on
	Frequency/CPM set at step “I”
	Frequency/CPM set at step “II”
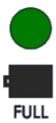	The power pack indicates green light and is fully charged (The power pack is inserted into the charging unit)
	The power pack indicates yellow light and will be charged (The power pack is inserted into the charging unit)

FAULT	The power pack demonstrates functional failure, the battery is not charging: Observe the User's Manual (The power pack is inserted into the charging unit)
READY	The charging unit is operational
READY	The charging unit is charging the power pack (yellow / orange / red light)

8 Address / Report

medical bees GmbH

Friedrich-Wöhler-Strasse 13

D-78576 Emmingen

Phone: +49 (7465) 929 831 0

Fax: +49 (7465) 929 831 1

E-Mail: info@medical-bees.de

When you do not reach us directly with a reportable event, then write an email to us, using the following email address: Meldung@medical-bees.de

Web: www.medical-bees.de

CE0483